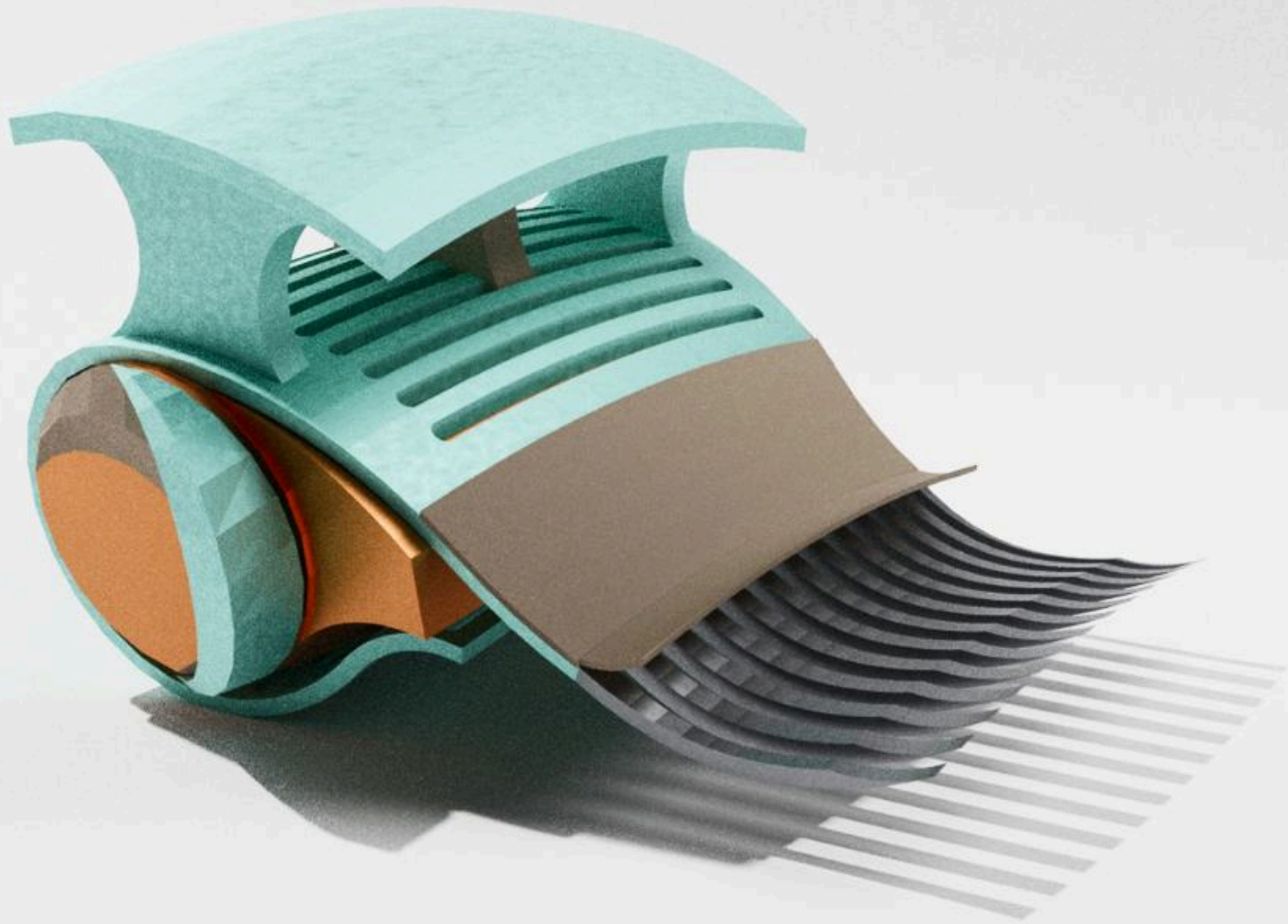

PROJECT OVERVIEW

This is a comb designed for people struggling with scalp psoriasis through constant feedback from the user base . Its form is designed considering the various types of methods users themselves use to clean their scalp and considering hair attributes like length, thickness and severity of the scabs.

INTENT

To design a comb for the demography of people having sensitive scalp or issues like psoriasis and sebhorric dermatitis.

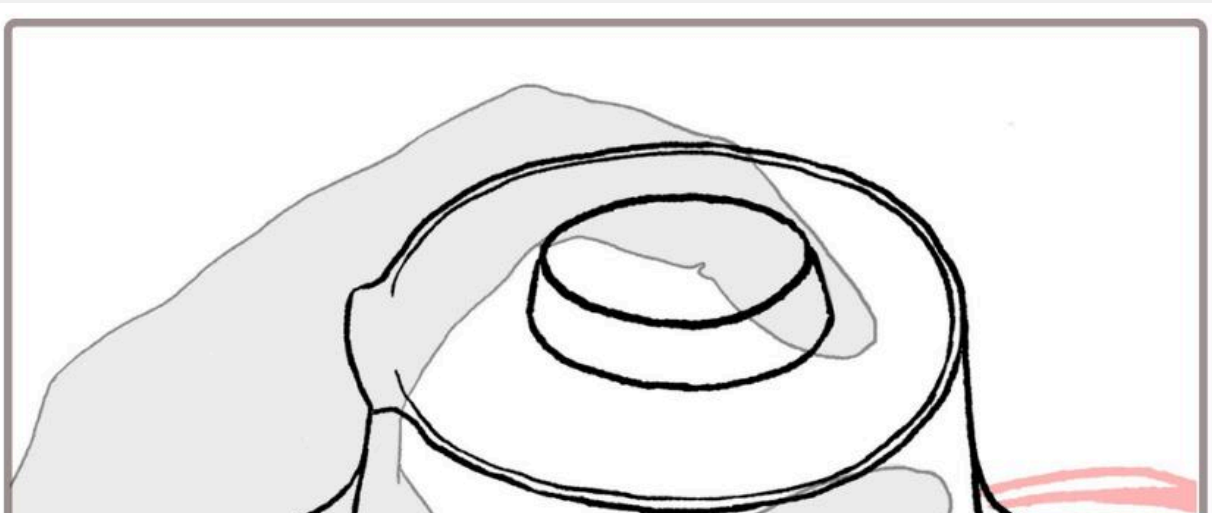

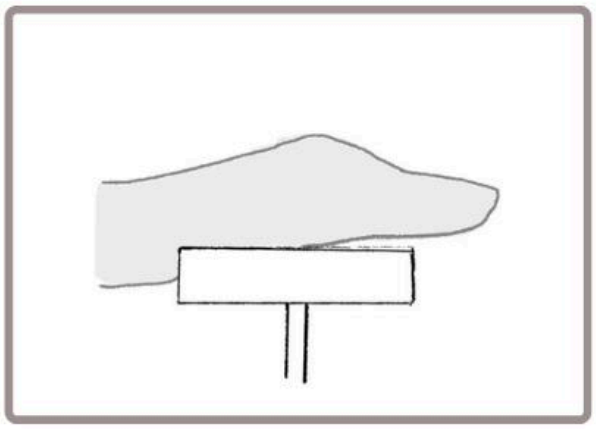

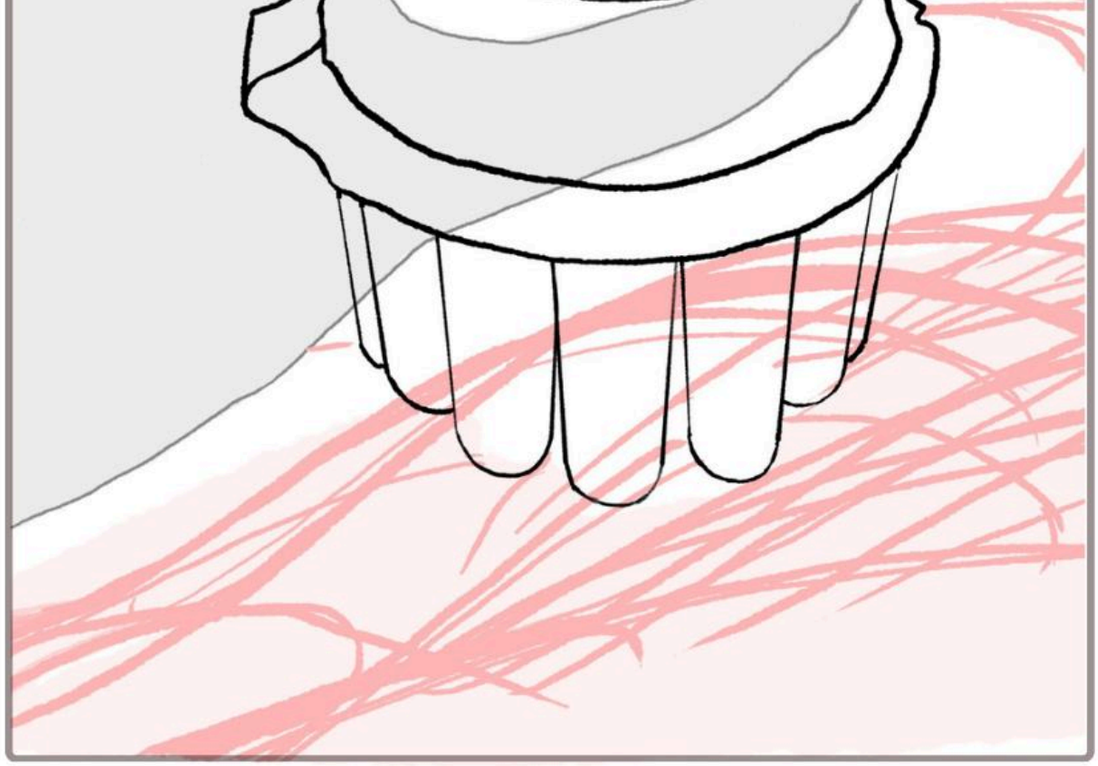

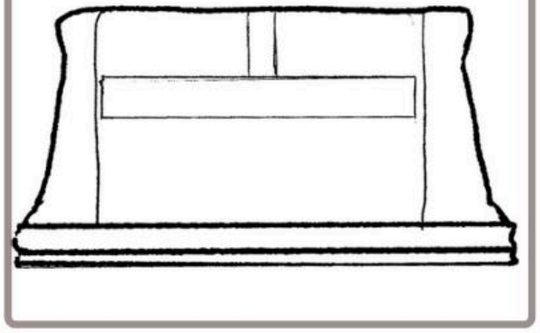

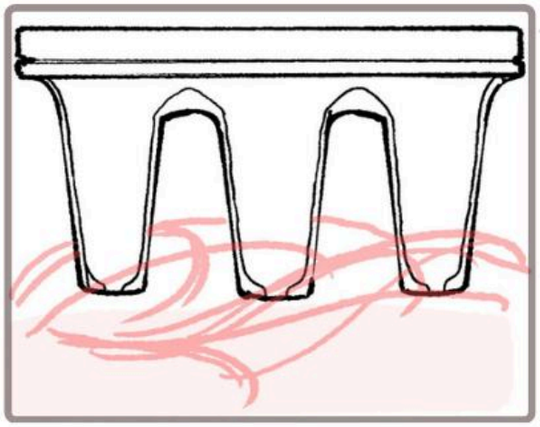

UNDERSTANDING USER AND FORMULATING THE PROBLEM

I use a lice comb as I have long hair...

Lice combs tend to hurt my scalp when removing scabs.

People think i am not hygenic and dont do anything about it.

It comes in waves, some bad some worst

Triggers vary can be oil, stress etc,

I tried the eyebrow pencil bristles and it works on the hairline edges.

Different types of bristles suit certain types of hair.

I cut off my hair because it became difficult removing scabs.

I sometimes use a vaccum to just pull out the scabs

Its easier to brush it off when the hair is wet.

I have broken combs while taking out scabs.

I tend to pick on my scalp which feels very inappropriate.

I got psoriatic arthritis on my fingers after a couple of decades.

UV Combs are great and effective but you might get used to it.

Prefer thicker bristles cause of having long hair and sensitive scalp

I like round brushes because it shakes of the scalp and good for short hair.

Sometimes use clobetasol to get it under control.

Hair loss and follical loss is common.

It makes me look less hygenic and I loose confidence.

I lightly comb off the flakes cause forcing would make psoriasis worst.

I used a scalp massager int he shower to remove the flakes

Steroids cause hair loss.

I like to use combs where i can put serums to ease the scalp

People think i am not hygenic and dont do anything about it.

It comes in waves, some bad some worst

It is itchy and there are small spots of blood which can bleed if i dont comb right

In office my attire will be full of flakes.

Since I have arthritis i need to angle my hand to put in the force as the comb is thin.

I have gone through chemo for my psoriasis

It is often mistaken as dandruff.

You do scalp weevinf , too rough on scabs means more psoriasis.

I have broken combs while taking out scabs.

I tend to pick on my scalp which feels very inappropriate.

I cant stop picking on my hair which even causes more hair to fall.

avoiding creams to prevent oily scalp

Its tough to clean the comb too after brushing.

No using nails to clean the scalp flakes.

Tried many routines and they take alot of my energy and time.

You have to identify triggers, there are many food varieties that do cause it.

high frequency combs helped me with my mild psoriasis

Sometimes the scabs are too difficult to remove .

Sometimes it gets worst or better.

WHAT IS PSORIASIS?

As per the NIH, psoriasis is a chronic disease in which the immune system becames overactive, causing skin cells to multiply too quickly. Patches of skin became scaly and inflamed , most often on the scalp, elbows or knees but other parts of the body can be affected as well.

Through reading forums and asking people's experience with sebbhoric dermatitis and psoriasis , I became acquinted with someone who gave me thorough feedback during the process.

MEET CARI...

She has a mild case of scalp psoriasis. Her friend has a severe case of psoriasis to the point where she requires chemo and her mother has a serious case of psoriasis and arthritis.

I have a mild case of psoriasis in the scalp, and have previous experience with the harder cases of psoriasis through my ex and her mother.

i had a classmate too 😟 like that...it looked painful.

It can be, especially for thicker scabbing and larger coverage. ex is on chemo now, not for cancer but to reduce the scabbing

for larger coverage, changes in temperature and/or humidity can be painful as it forces the scabby area to expand and contract, pulling on the underlying skin or pushing it together painfully. For some, there's an added difficulty of having to avoid bases and acids because they worsen the scabbing in the affected area

I had asked a few servers regarding this. But the response pool was low.

Well, there's a solid bit of shaming going on when it comes to having psoriasis, as one of the known potential causes is bad hygiene

even in salons....people say its a dandruff when typical remedies for that make it worst....

Friend got rejected from her dream job because of it

The closest people to me have severe psoriasis.

It's a pain to clean scabs from the comb especially if you have arthritis.

The combs bristles are too weak.

It's painful to comb with sharp bristles.

There is alot of shaming going around cause people think its dandruff.

light therapy might loose effect .

Put extra time for care

Use far apart fat bristles.

Helps mom clean her scalp.

Lack of confidence.

CURRENT USE

User's prefered products of use to care for their scalp depends on the severity and length of hair.

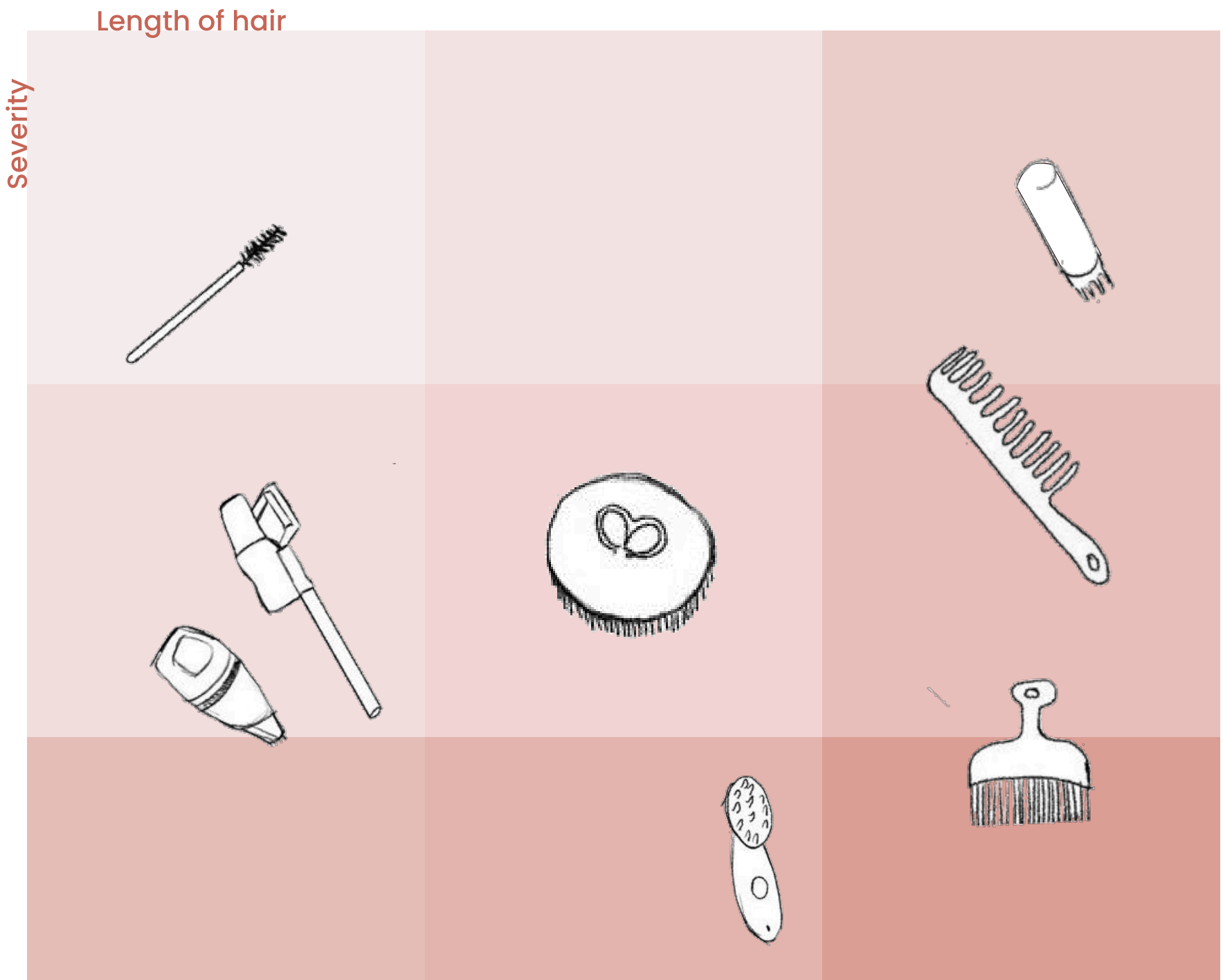

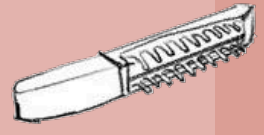

DESIGN FEATURES

Design to be built like a tank. The design is to be very solidly built to be able to scrape off thick scabs of varying degrees.

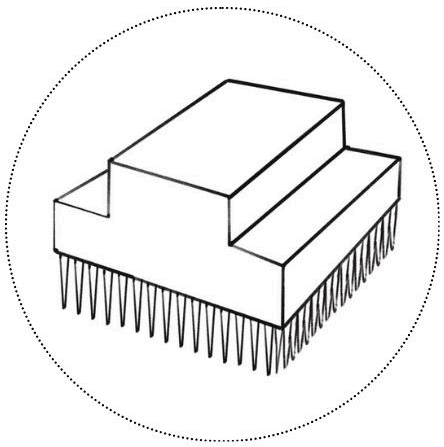

About 3 in 20 to 3 in 10 people with psoriasis may develop psoriatic arthritis .Hence, a need to make the comb have a comfortable grip pattern to ease the force on the fingers.

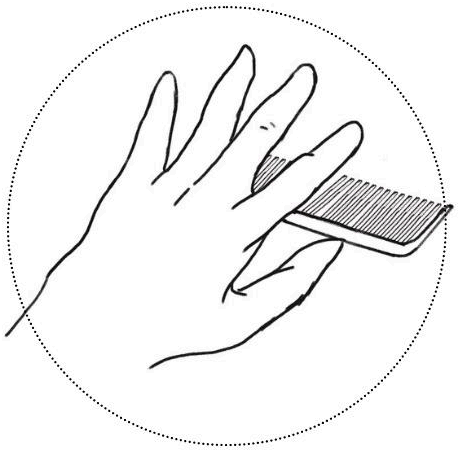

The comb should have a range of bristles from wide range to lice types to suit different hair types and severity of flare up.

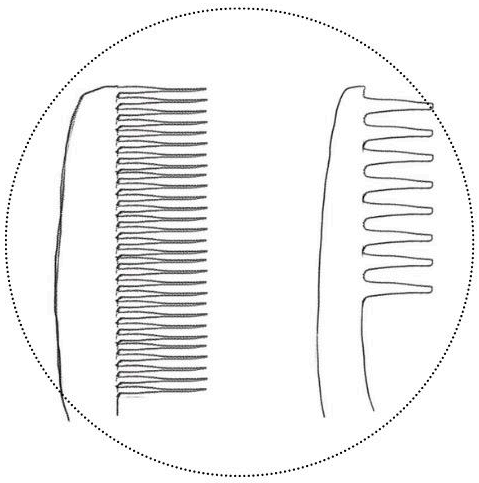

RESEARCH

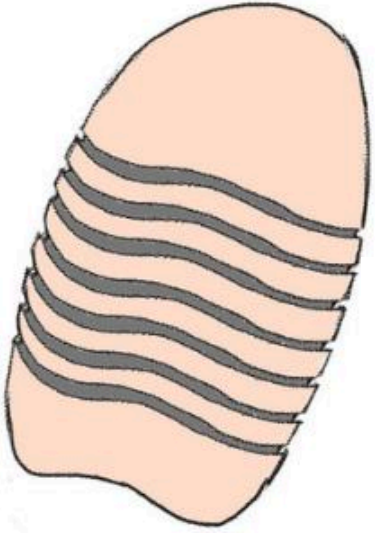

Study of OXO products

The handles are wide, Textured hand easier to hold and requires less force

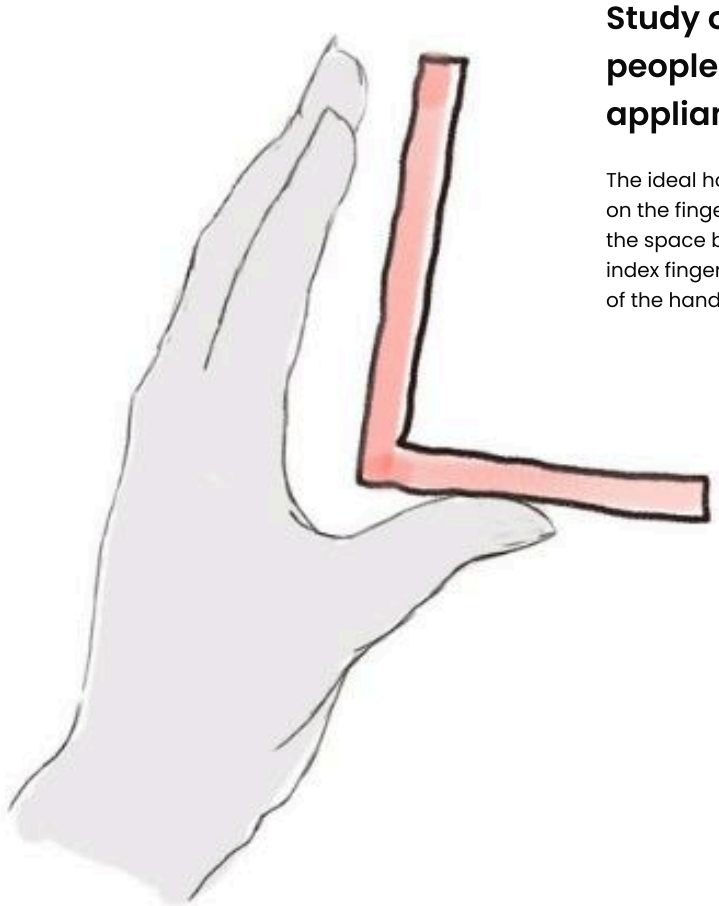

Study of Grip Patterns amongst people with arthritis for kitchen appliances

The ideal hold eases the force exerted on the fingers. It's noted that the use of the space between the thumb and the index fingers or even the palm and back of the hand.

PARAMETERS

GRIP PATTERN

IDEATIONS

Started with the grip type of two comb types. We are looking into forms that suit psoriasis arthritis patients.

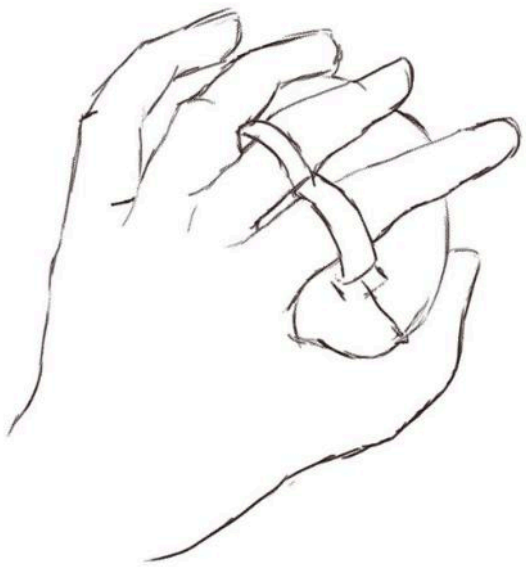

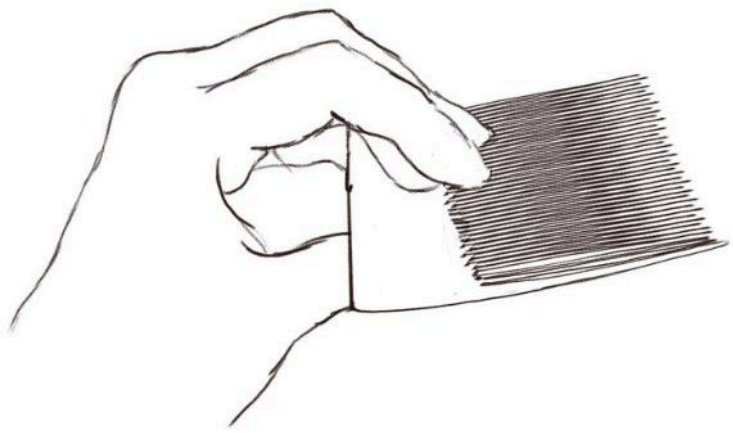

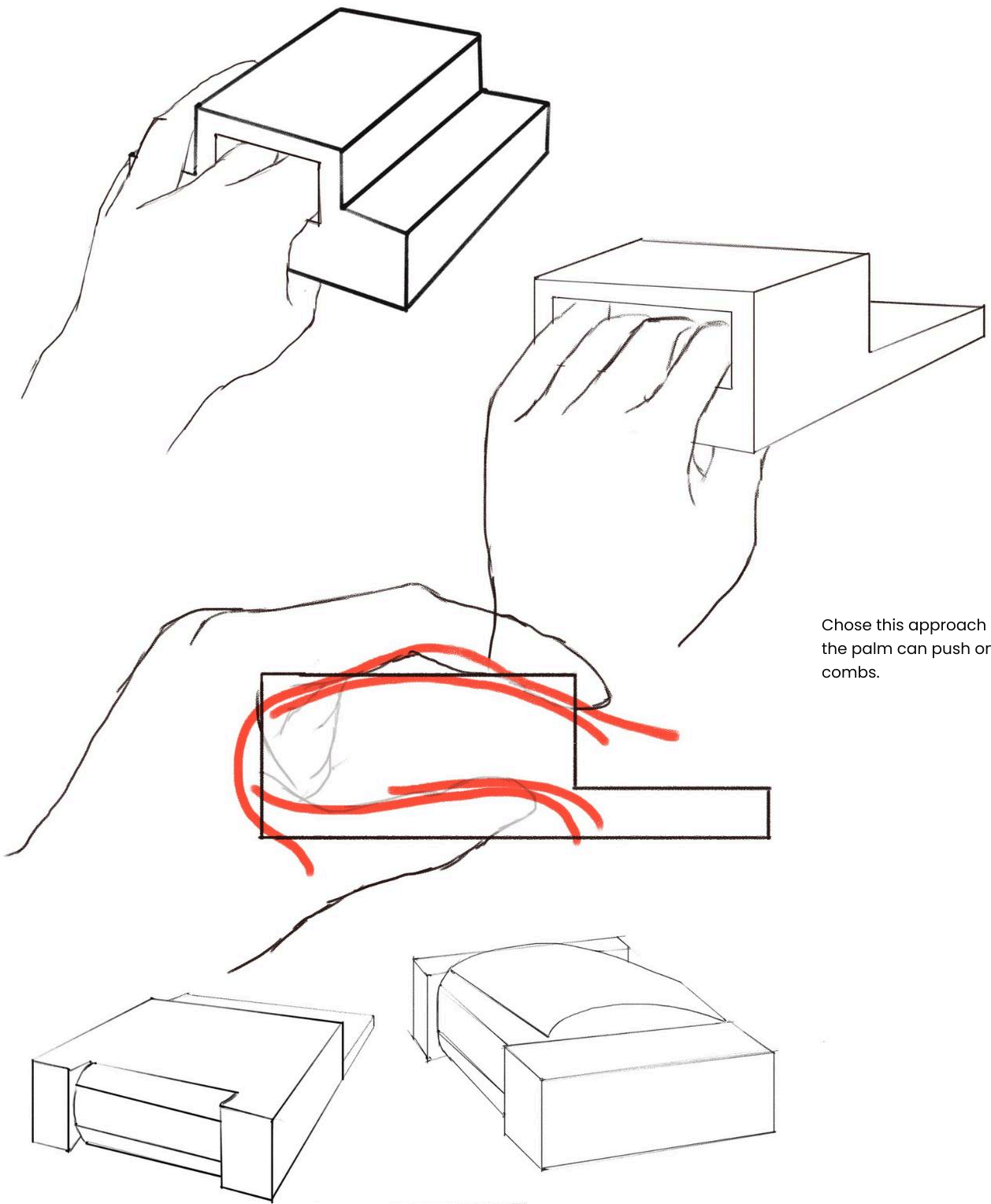

Chose this approach so that the force of the palm can push onto the edges of the combs.

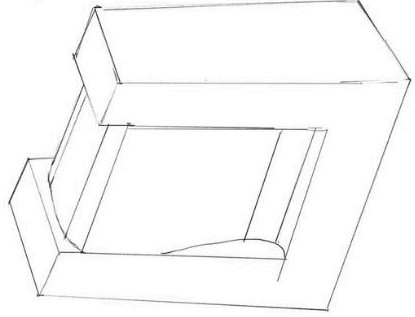

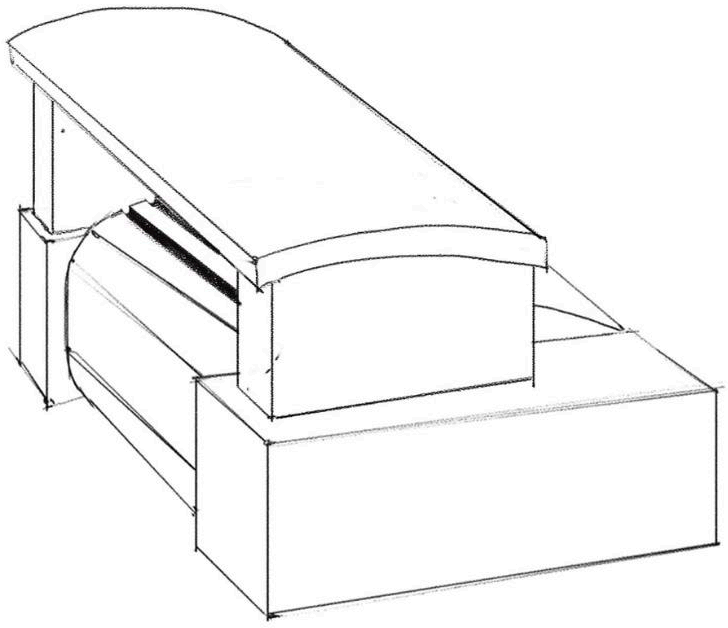

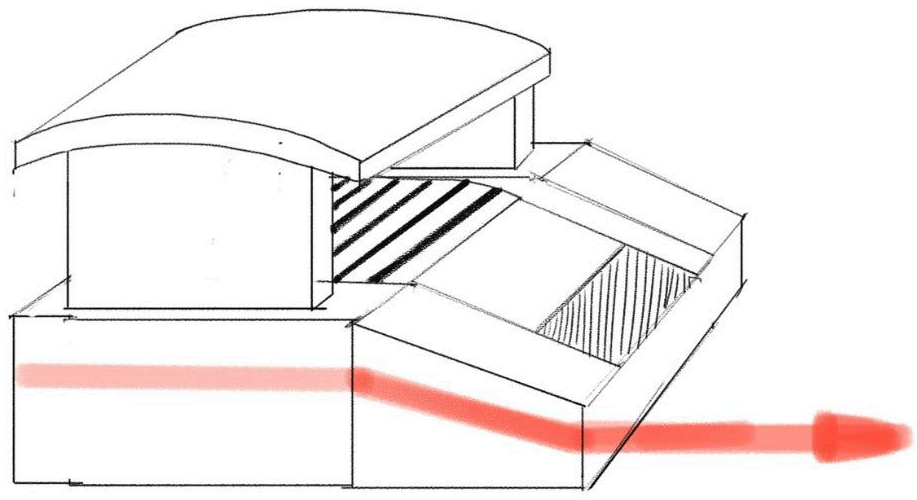

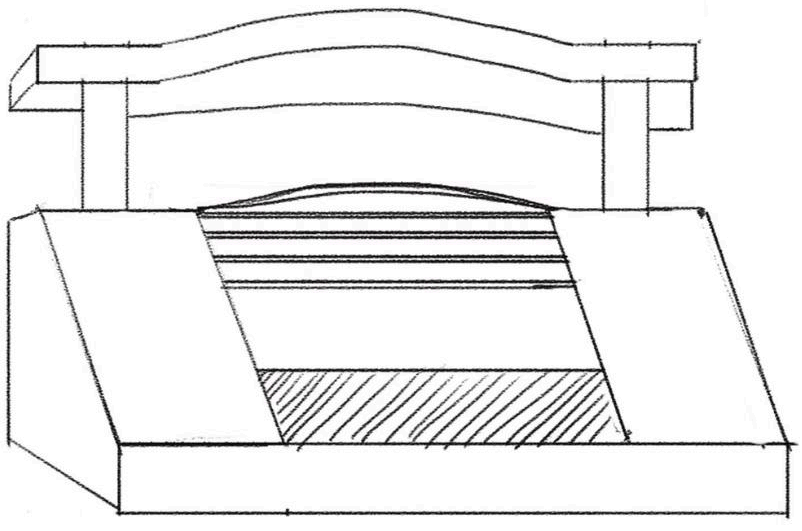

The bristles are to accomplish two goals.
To remove scabs from the scalp and to
remove the from the hair and comb.

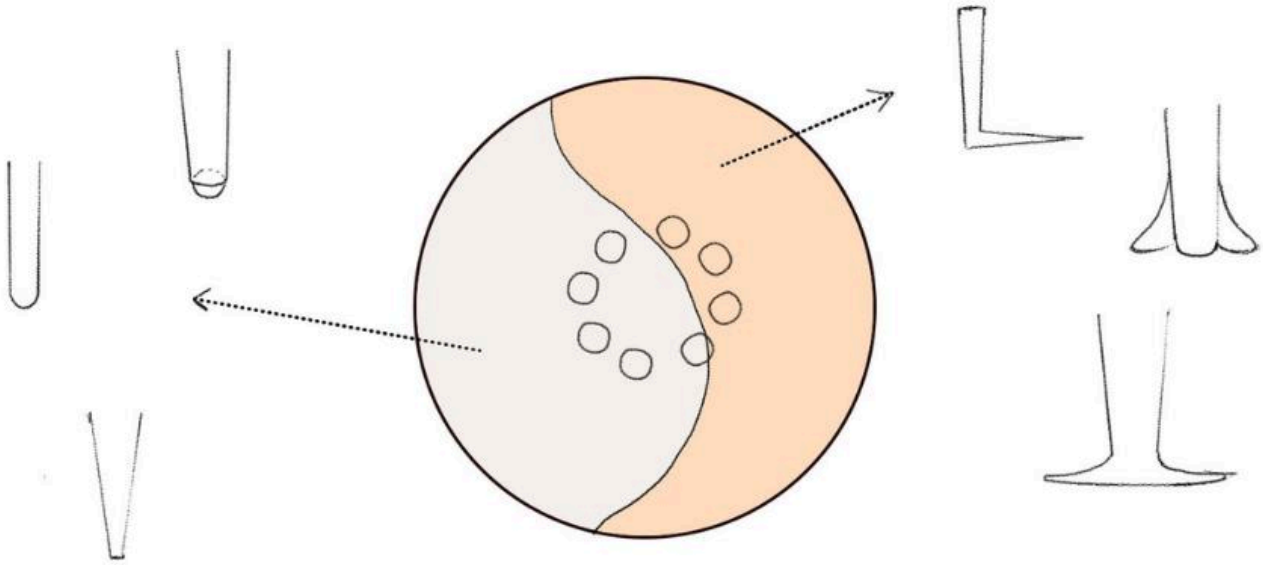

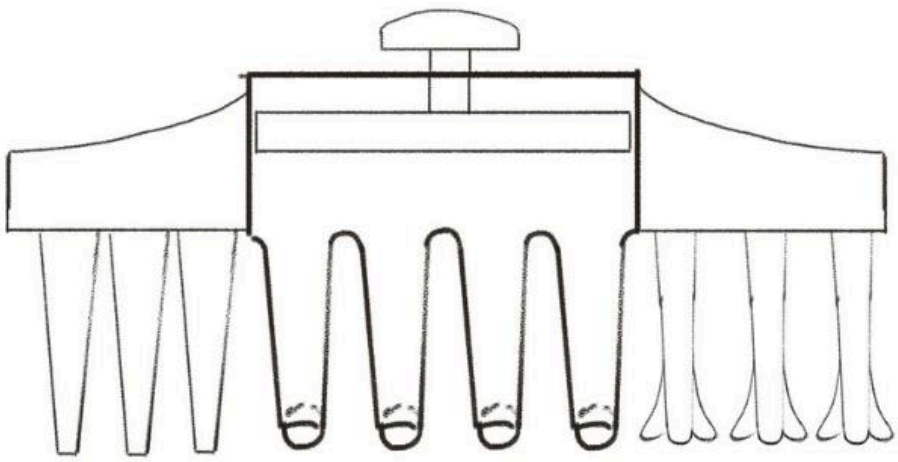

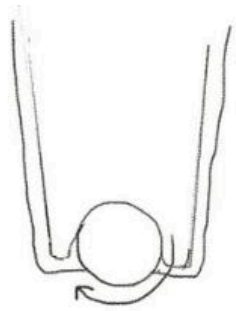

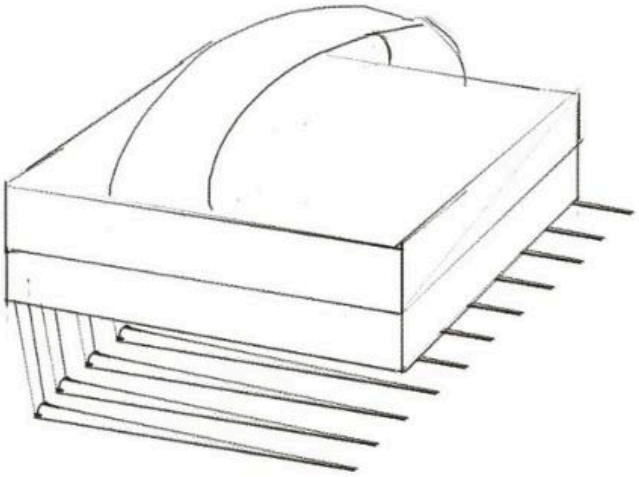

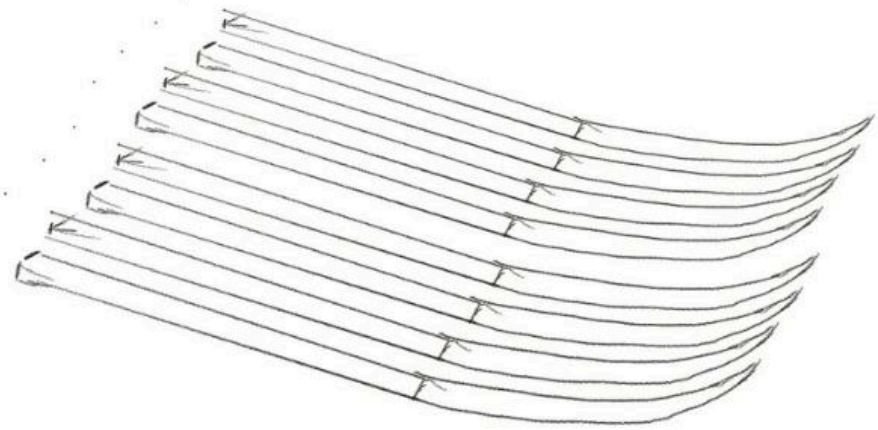

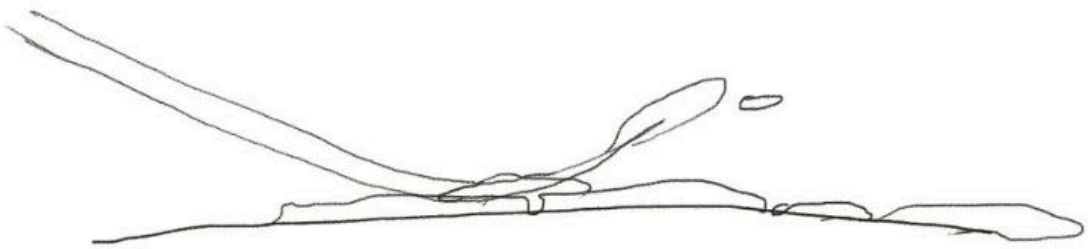

Upon feedback from Cari, she mentioned how a curved bristle could help in plucking out the scabs. This could benefit with some user testing.

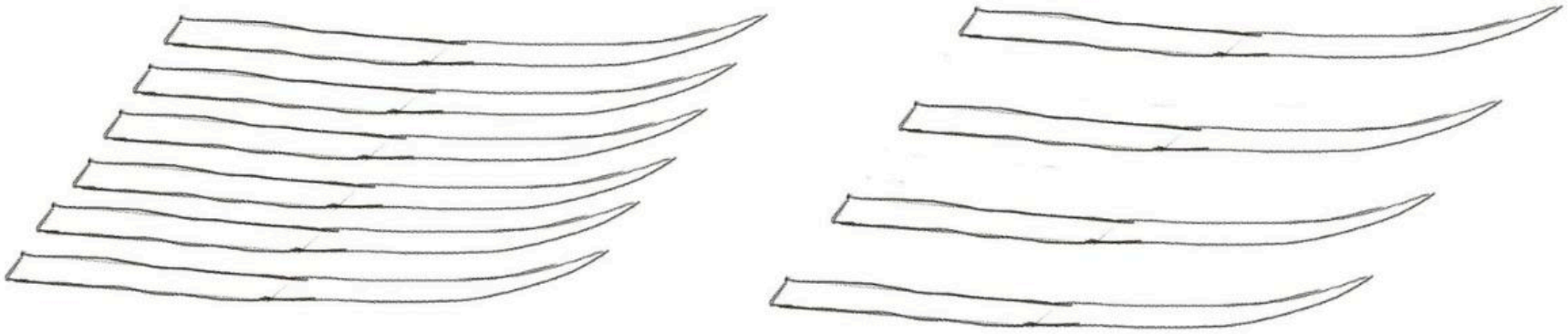

There were also a bunch of discussion , on why not use a vaccum on the comb? or why not let it vibrate and this is where the core user was identified.

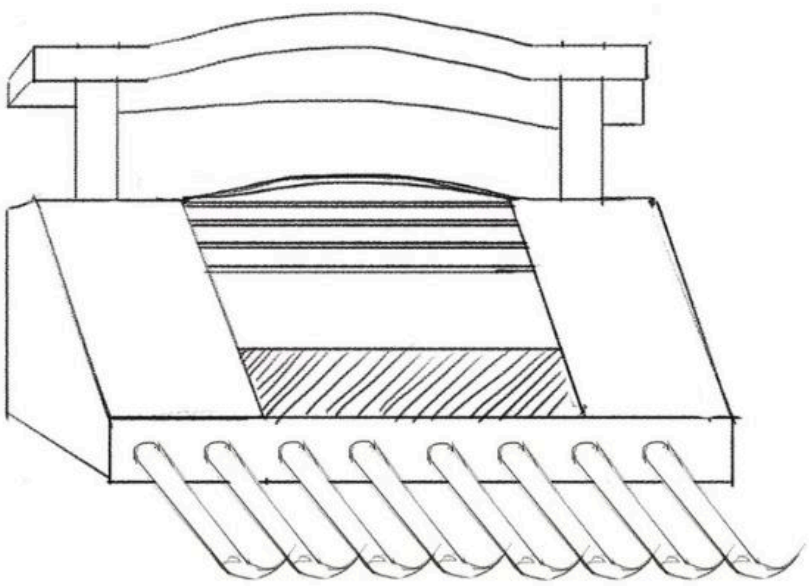

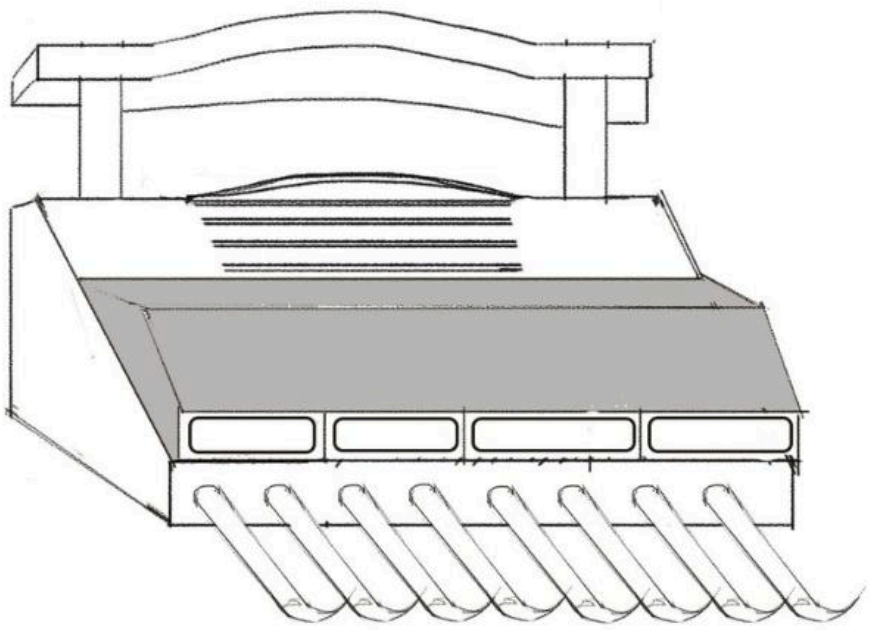

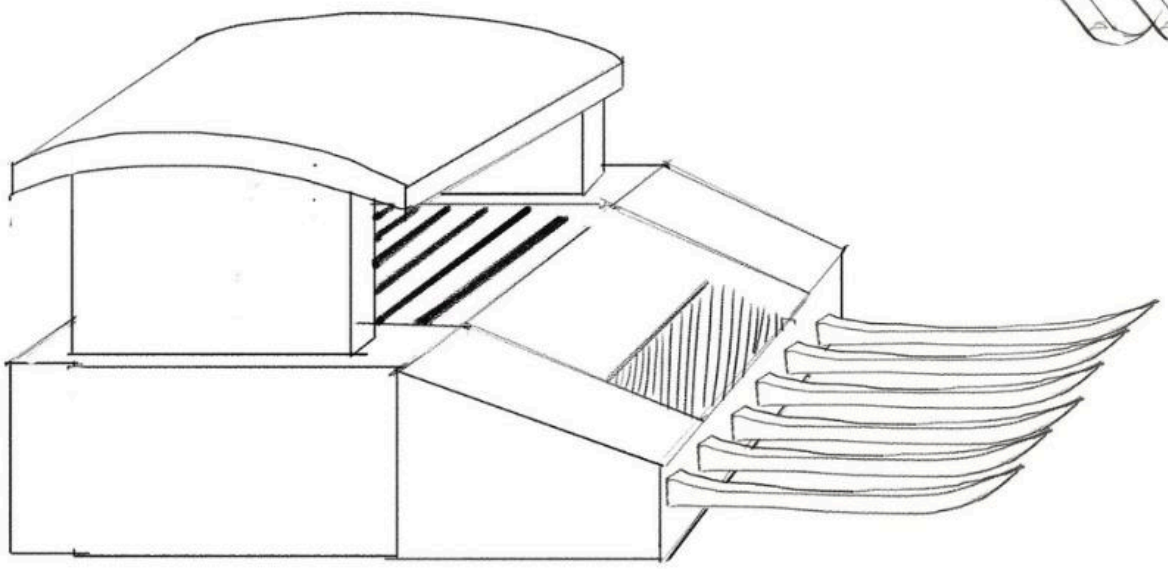

STATIC

This is preferable for serious flare ups. Thicker scabs need bulky solid designs .By adding moving mechanic ,one might be compromising on a strong design.

DYNAMIC

For moderate or mild cases, combs can have a combination of bristles and design aspects of initial proposals could be included.

3D PRINT

Decreasing length from 15 cm to 9 cm is needed. Its too long and needs to allow the fingers to touch the bristles of the lice comb. The thumb is an important finger for people struggling with arthritis and this form restricts it. Its appearance is also intimidating for use.

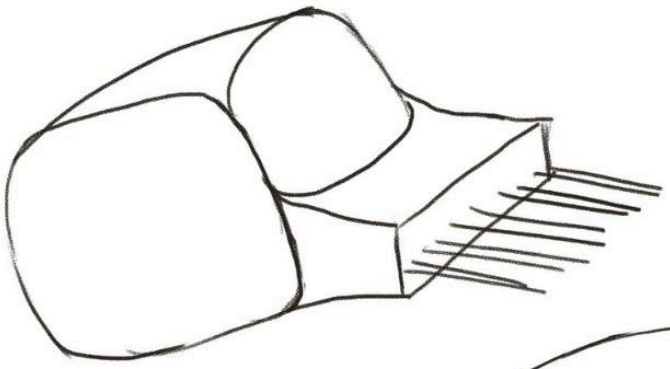

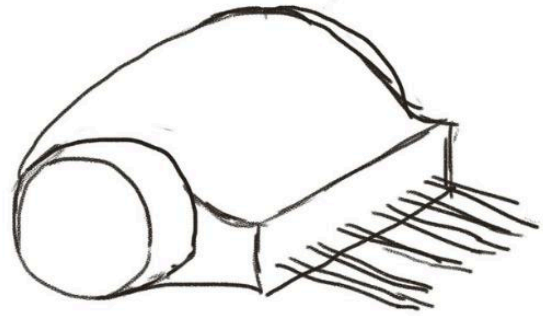

Cutting down the form to create a more organic version that's comfortable to grip.

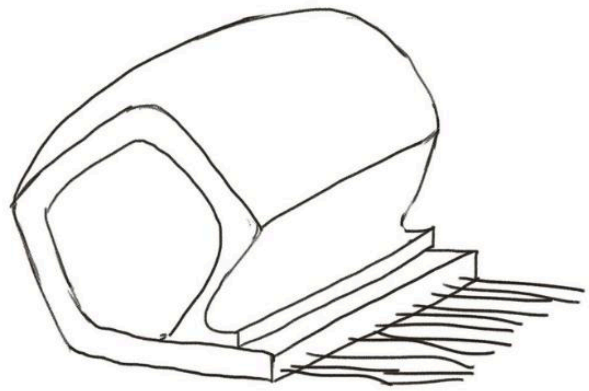

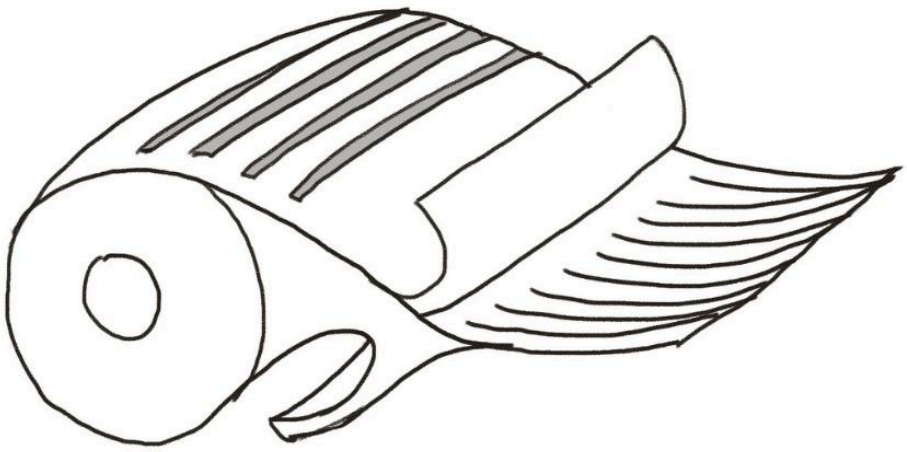

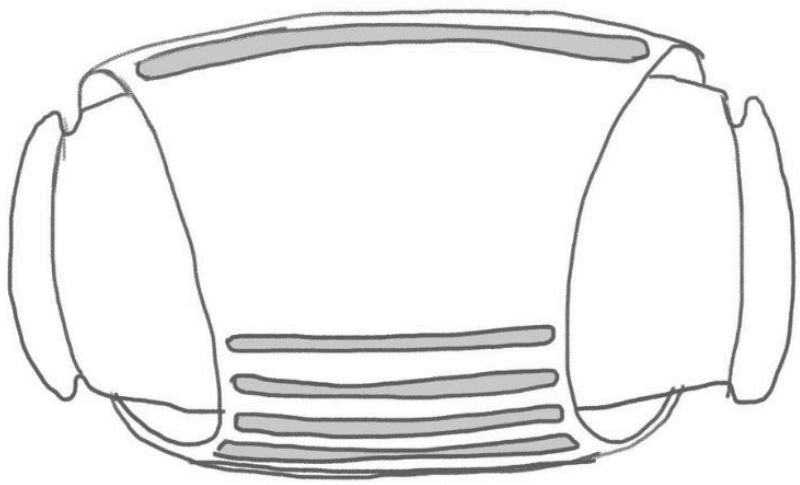

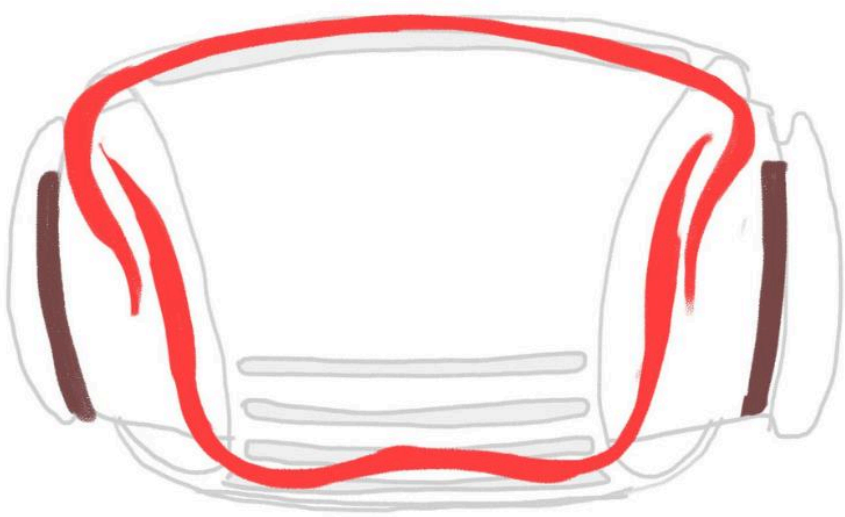

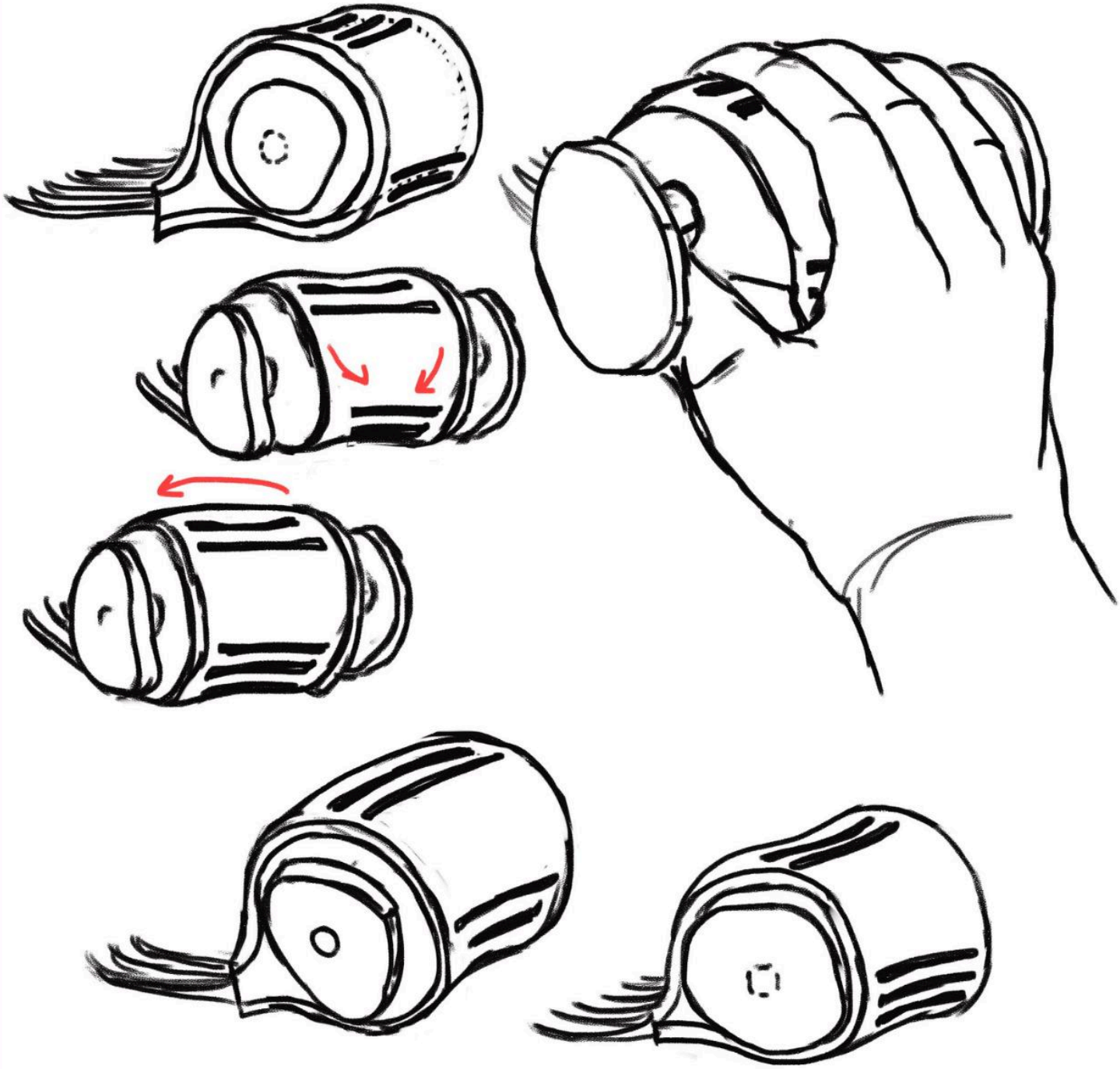

3D PRINT

More comfort for the thumb .Allow design to have a thumb support.Similar to the previous design, the grip pattern feels better but restricts the thumb depending on the position of use.

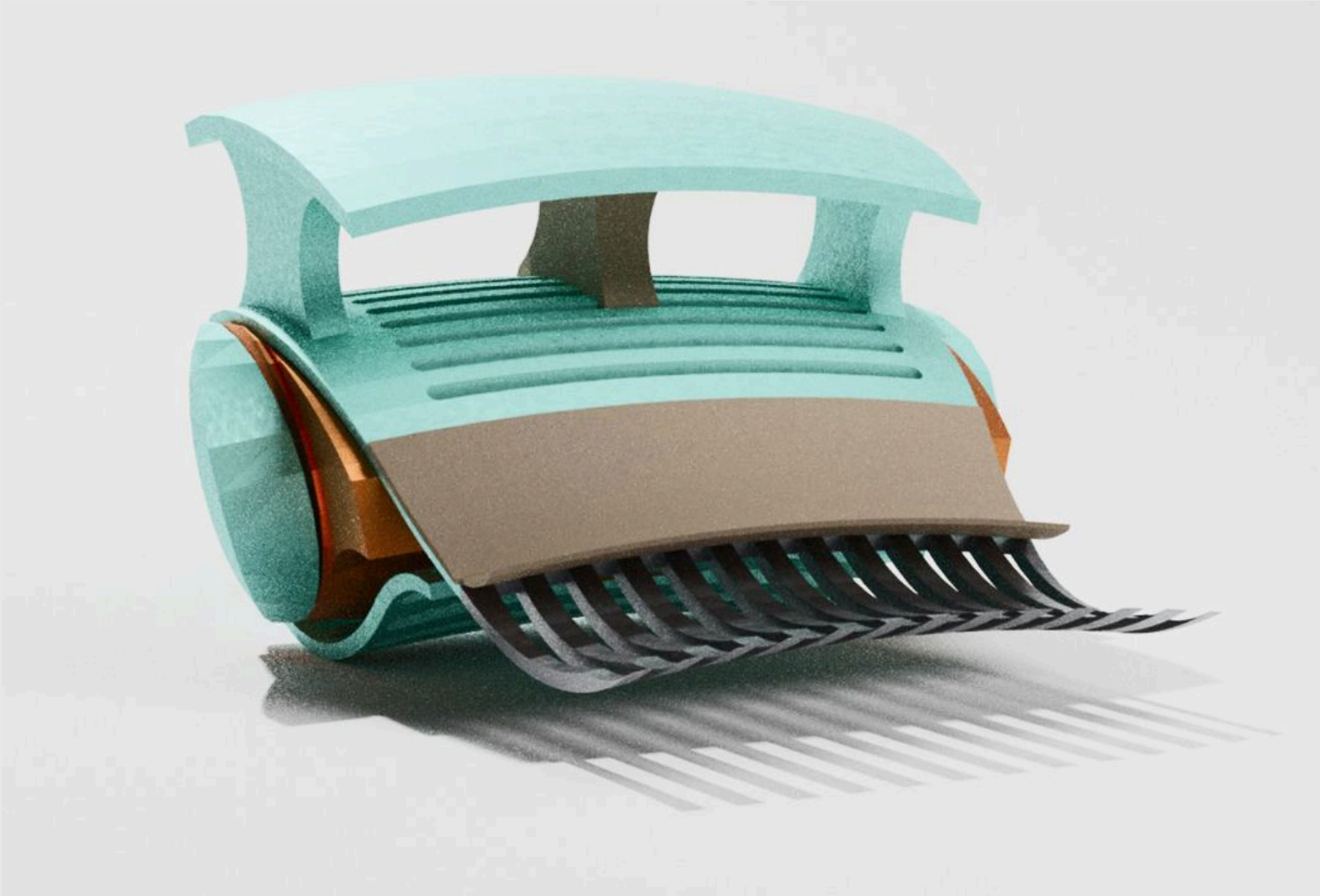

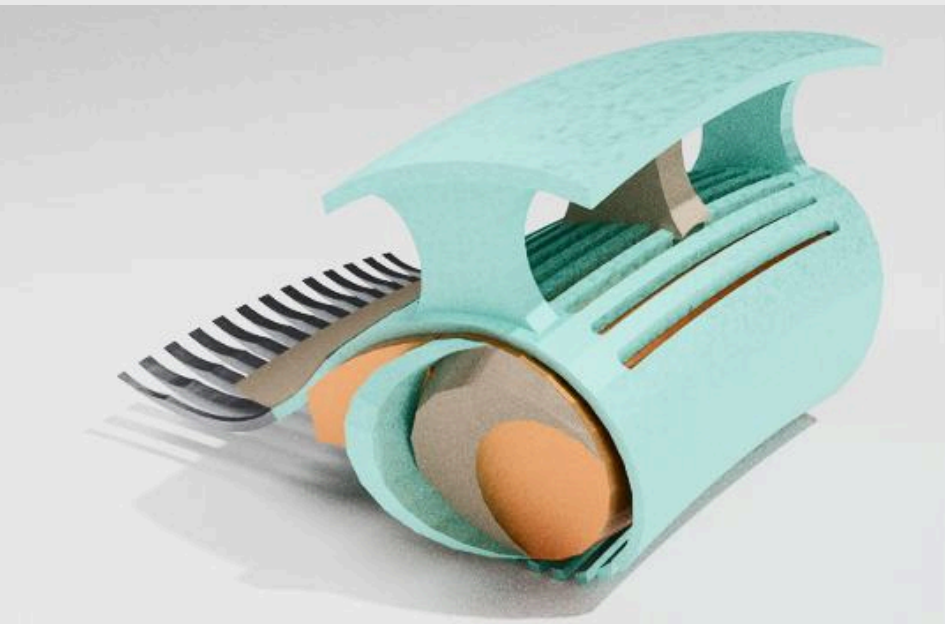

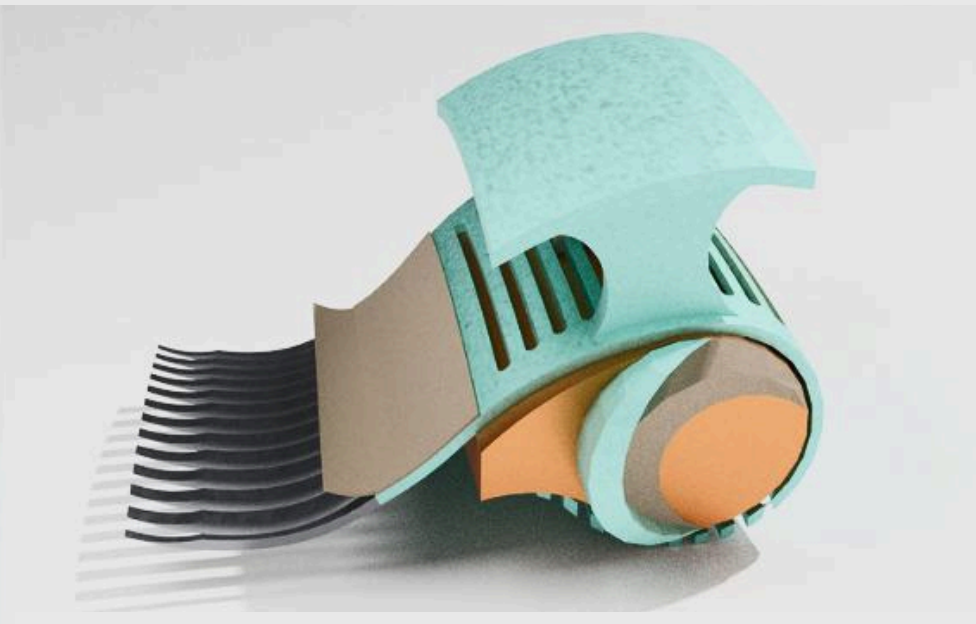

FUTURE SCOPE

Comb Kit

Make an arthritis kit, where we customers can put in their hair type , scalp type, severity of issue, medications and create a comb kit for towards their hair type.