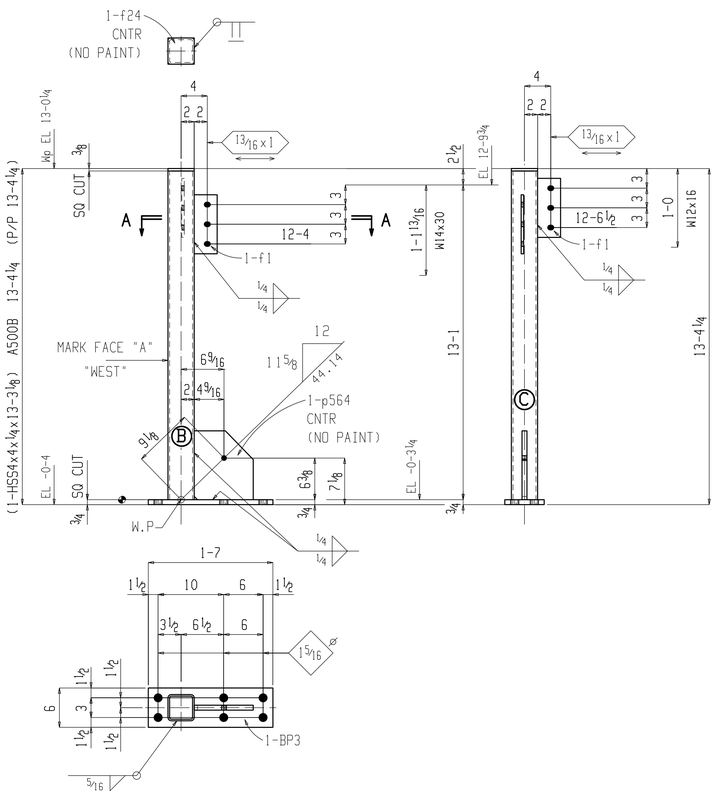

ONE COLUMN 11C1

AT GRID:
A.1 & 5.1

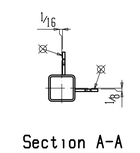

Section A-A
11C1

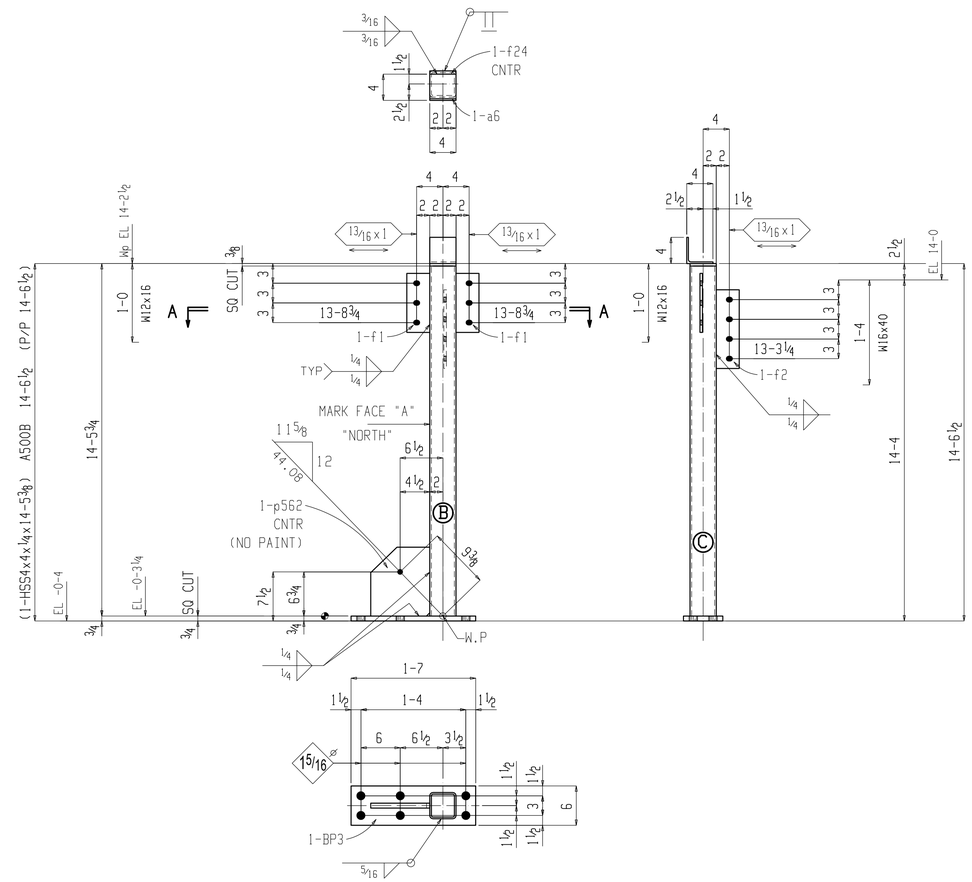

ONE COLUMN 11C2

AT GRID:
A.1 & 4.1

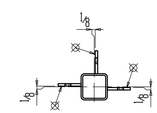

Section A-A
11C2

BILL OF MATERIAL

QTY TOTAL	PC MARK	DESCRIPTION	LENGTH FT.	LENGTH IN.	REMARKS	WEIGHT TOTAL
ONE	11C1	COLUMN				214
1	11C1	HSS4x4x¼	13	3⅛	S2E A500B	162
1	p564	PL¾x9	0	10½	A36	20
1	BP3	PL¾x6	1	7	A36	24
1	f24	FL⅜x4	0	4	A36	2
2	f1	FL⅜x3½	0	9	A36	6
ONE	11C2	COLUMN				235
1	11C2	HSS4x4x¼	14	5⅜	S2E A500B	176
1	a6	L4x4x¼	0	4	A36	2
1	p562	PL¾x9	0	10½	A36	20
1	BP3	PL¾x6	1	7	A36	24
1	f24	FL⅜x4	0	4	A36	2
1	f2	FL⅜x3½	1	0	A36	4
2	f1	FL⅜x3½	0	9	A36	6