V2-B | STAGE 1 MOTOR INTERFACE CORRECTED IN CAD

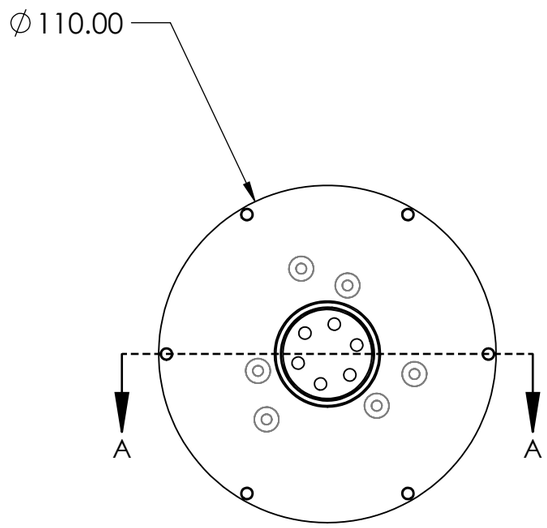

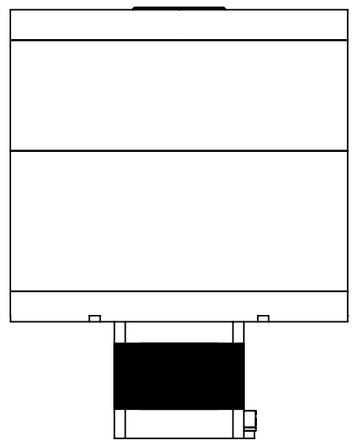

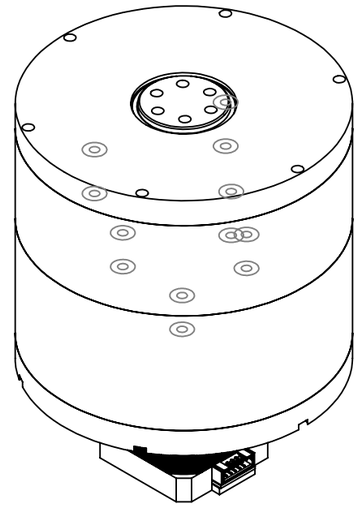

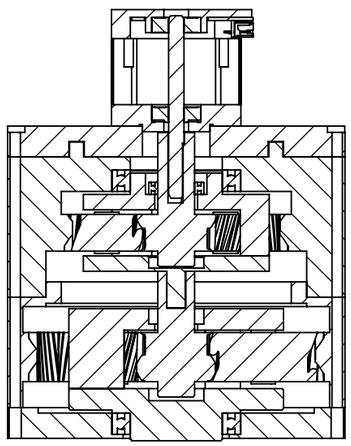

SECTION A-A

AXIAL LENGTH 103.75 mm EXCLUDING MOTOR.
AXIAL LENGTH 140.55 mm INCLUDING MOTOR.
FIXED RINGS, NOMINAL 20:1 REDUCTION.

SUN V2-B: TRIMMED NOSE AND ROUND LEAD.
CHECK ACTUAL SHAFT ENGAGEMENT AND CORNER CLEARANCE.

OUTPUT BEARING SIZE CLASS 6806, 30 X 42 X 7.
PURCHASED SEAL TYPE AND RETENTION REQUIRE VERIFICATION.

	NAME	SIGNATURE	DATE
DRAWN			
CHK'D			
APPV'D			
MFG			
Q.A			

DO NOT SCALE DRAWING | REVISION: V2-B-D1

TITLE: PLANETARY GEARBOX

MATERIAL: SEE COMPONENT DRAWINGS

DWG NO. PD-ASM | A3

SCALE:1:2 | SHEET 1 OF 3

SOLIDWORKS Educational Product. For Instructional Use Only.

BASELINE: 4.00 mm SEAT.
0.75 mm LIP OVERLAP.

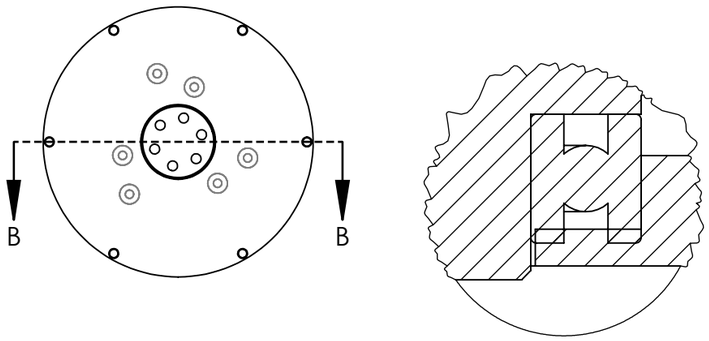

DETAIL D
SCALE 3 : 1

P1: 7.00 mm NOMINAL SEAT.
Ø34.60 EXIT. FIT AND RETENTION OPEN.

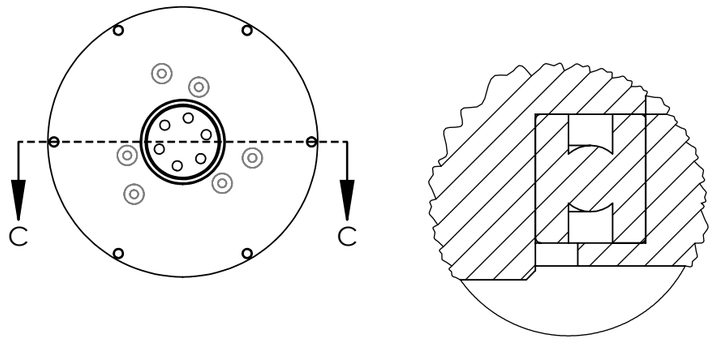

DETAIL E
SCALE 3 : 1

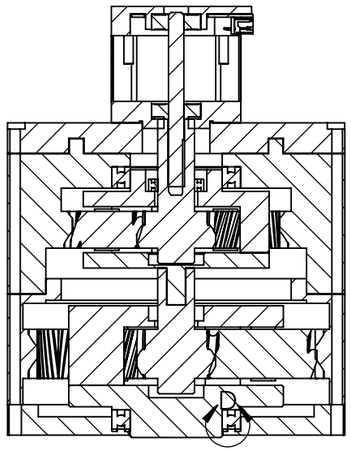

SECTION B-B

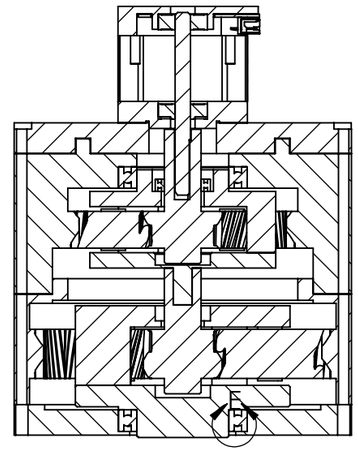

SECTION C-C

					DO NOT SCALE DRAWING	REVISION
						V2-B-D1
	NAME	SIGNATURE	DATE		TITLE: PLANETARY GEARBOX	
DRAWN						
CHK'D						
APPV'D						
MFG						
Q.A				MATERIAL: SEE COMPONENT DRAWINGS	DWG NO. PD-ASM	A3
					SCALE:1:2	SHEET 2 OF 3

SOLIDWORKS Educational Product. For Instructional Use Only.

BILL OF MATERIALS

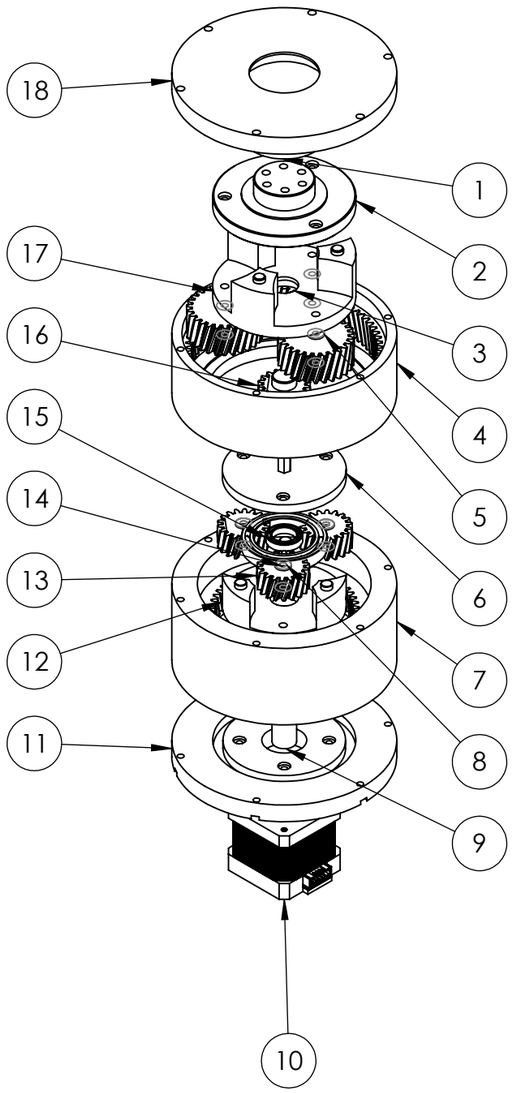

ITEM NO.	PART NUMBER	DESCRIPTION	QTY.
1	ISO 15 RBB - 1830 - 26,SI,NC,26_68		2
2	PLN-V2 Stage_2_Output		1
3	PLN-V2 Stage2_Planet_27T		3
4	PLN-V2 Stage2_Ring_72T		1
5	PLN-V2 1mm gear spacetr		6
6	PLN-V2 first stage carrier 2		1
7	PLN-V2 Stage1_Ring_Gear		1
8	PLN-V2 1mm gear spacetr		6
9	PLN-V2 Stage1_Sun_Gear		1
10	PLN-V2 nema17_17HS4401_b		1
11	PLN-V2 motor mount (planetary)		1
12	PLN-V2 first stage carier		1
13	PLN-V2 Stage1_Planet_Gear		3
14	PLN-V2 bushing		6
15	ISO 15 RBB - 1712 - 20,SI,NC,20_68		1
16	PLN-V2 Stage2_Sun_18T		1
17	PLN-V2 2nd stage carrier		1
18	PLN-V2 P10 output_housing		1

ITEM 5: STAGE_2 SPACER, 3.75 mm.
ITEM 8: DEFAULT SPACER, 1.75 mm.

SEE PLANETARY GEARBOX ASSEMBLY PROCEDURE.

	NAME	SIGNATURE	DATE
DRAWN			
CHK'D			
APPV'D			
MFG			
Q.A			

DO NOT SCALE DRAWING | REVISION: V2-B-D1

TITLE: PLANETARY GEARBOX

MATERIAL: SEE COMPONENT DRAWINGS

DWG NO. PD-ASM

A3

SCALE:1:2 | SHEET 3 OF 3

SOLIDWORKS Educational Product. For Instructional Use Only.

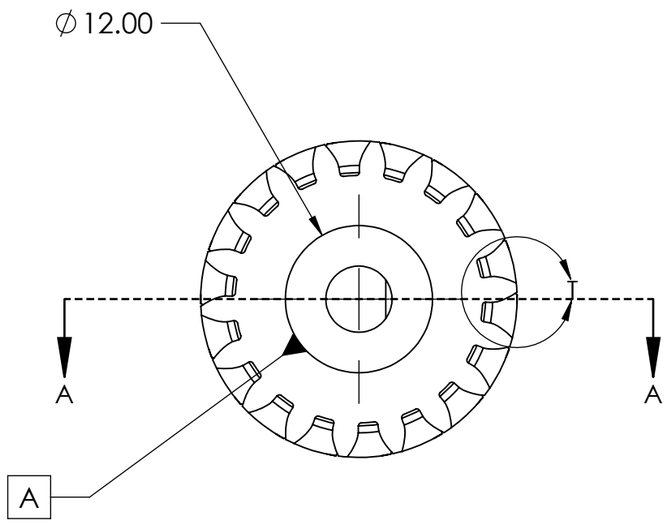

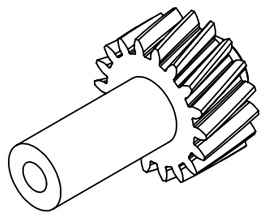

GEAR NOMINALS - HOLD	
PARAMETER	VALUE / BASIS
Tooth count / hand	18 / LH
Normal / transv. module	1.250 / 1.294095
Normal / transv. pressure	20.00 / 20.6469 deg
Reference helix	15.00 deg LH
Reference / base diameter	23.294 / 21.798
Tip / root diameter	25.794 / 20.169
Flank face width	12.00
Transv. reference thickness	1.88276 source
Radial tooth depth	2.812
Shift / root blend	0 source / R0.25 source
Accuracy / finish	HOLD - qualify process

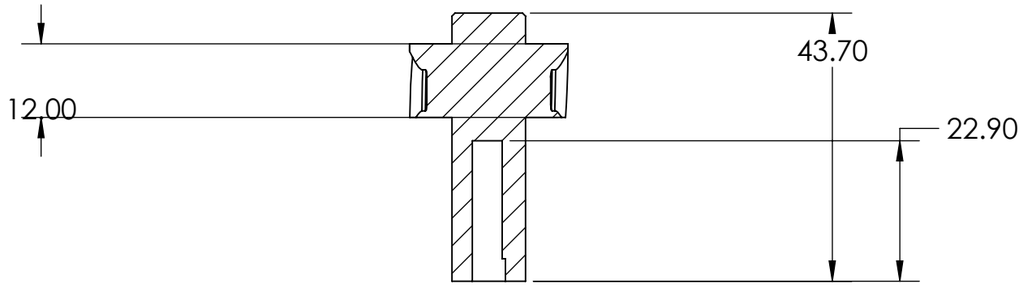

SECTION A-A
SCALE 1 : 1

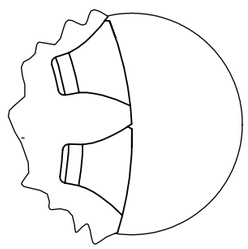

DETAIL T
SCALE 4 : 1

TOOTH INSPECTION	
CHECK	METHOD / STATUS
Profile / lead	Gear CMM; grade hold
Pitch / runout	Index / datum setup hold
Tooth thickness	Span or pins; limits hold
Mesh	Roll test and hot backlash

PLA TRIAL OR CNC ROUTE TBD.

DIMENSIONS IN mm | ASME Y14.5-2018

BORE ENTRY Ø5.40 X 3.65 DEEP FROM TRIMMED FACE.
FLAT AT 2.20 FROM AXIS. KEEP EXISTING SOCKET FLOOR STATION.

PRESS FIT IS NOT SPECIFIED. CHECK 17.90 NOMINAL FLAT ENGAGEMENT.
CHECK 0.30 NOMINAL NOSE CLEARANCE TO MOTOR BOSS.

CONTROLLED CAD: PD-G1S V2-B, DEFAULT.

	NAME	SIGNATURE	DATE
DRAWN			
CHK'D			
APPV'D			
MFG			
Q.A			

MATERIAL: PLA TRIAL

DO NOT SCALE DRAWING | REVISION: V2-B-D1

TITLE: STAGE 1 SUN GEAR

DWG NO. PD-G1S

A3

SCALE:1:1 | SHEET 1 OF 1

SOLIDWORKS Educational Product. For Instructional Use Only.

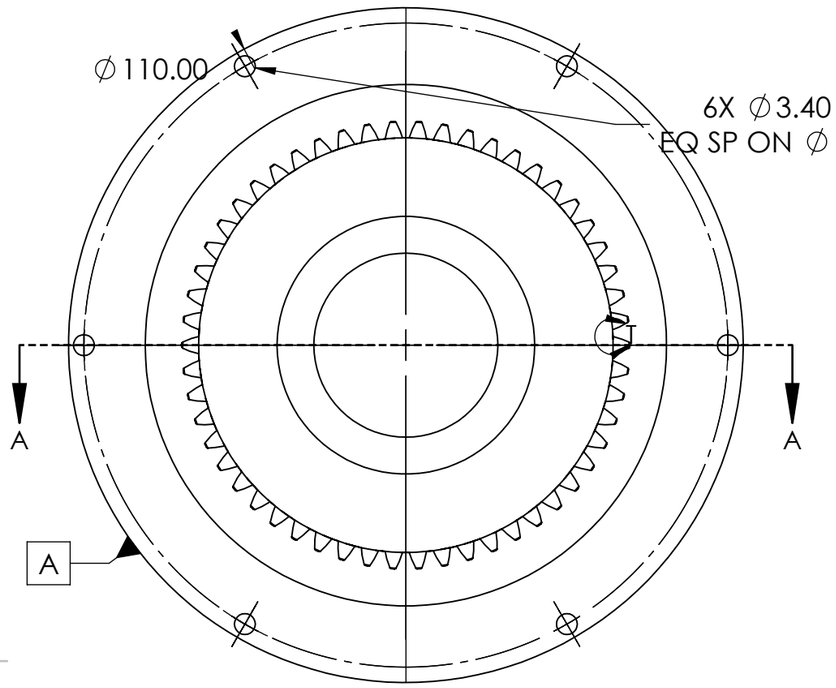

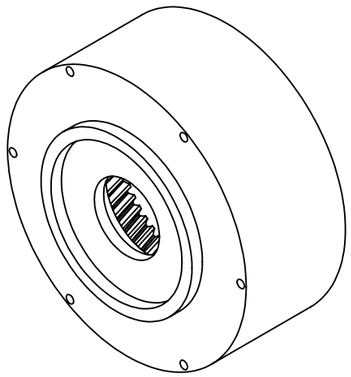

GEAR NOMINALS - HOLD	
PARAMETER	VALUE / BASIS
Tooth count / hand	54 / RH
Normal / transv. module	1.250 / 1.294095
Normal / transv. pressure	20.00 / 20.6469 deg
Reference helix	15.00 deg RH
Reference / base diameter	69.881 / 65.393
Tip / root diameter	67.581 / 73.006
Flank face width	12.00
Transv. reference thickness	1.88276 source
Radial tooth depth	2.712
Shift / root blend	Not unique / Hold / source fit
Accuracy / finish	HOLD - qualify process

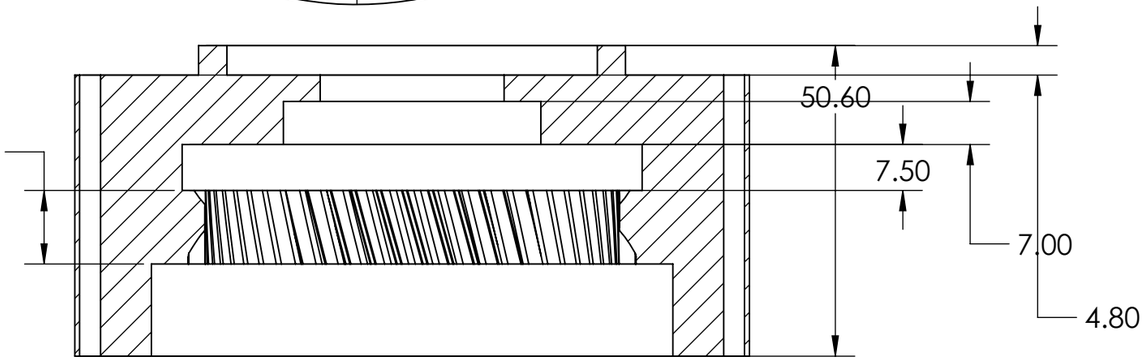

SECTION A-A

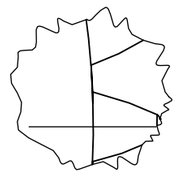

DETAIL T
SCALE 4 : 1

TOOTH INSPECTION	
CHECK	METHOD / STATUS
Profile / lead	Gear CMM; grade hold
Pitch / runout	Index / datum setup hold
Tooth thickness	Span or pins; limits hold
Mesh	Roll test and hot backlash

PLA TRIAL OR CNC ROUTE TBD.

DIMENSIONS IN mm | ASME Y14.5-2018

INSPECT FLANK PROFILE, HELIX AND PITCH TO CONTROLLED MODEL.
REPORT TOOTH THICKNESS AND INSTALLED MESH. GRADE UNASSIGNED.

6X Ø3.40 through on Ø105 PCD; fit/clocking on hold.
Stepped bores: Ø85 entry, Ø75 relief, Ø42 seat, Ø30 exit.
End lip: Ø69.60 / Ø60.40. Model controls stepped profile.

CONTROLLED P0 CAD: Stage1_Ring_Gear.SLDPRT / DEFAULT

	NAME	SIGNATURE	DATE
DRAWN			
CHK'D			
APPV'D			
MFG			
Q.A			

DO NOT SCALE DRAWING | REVISION: E03-D1

TITLE: STAGE 1 RING GEAR

MATERIAL: TBD

DWG NO. PD-G1R

A3

SCALE:1:1 | SHEET 1 OF 1

SOLIDWORKS Educational Product. For Instructional Use Only.

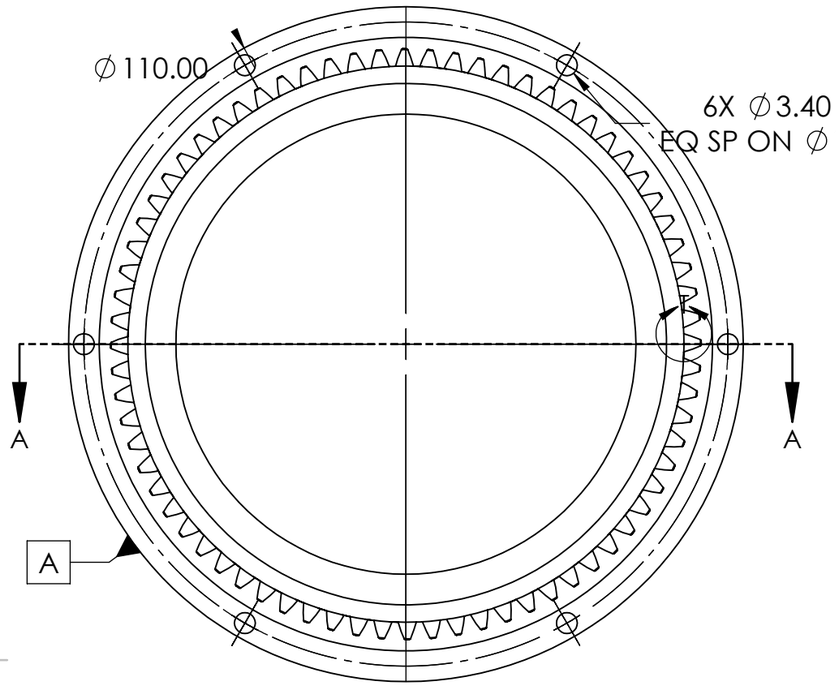

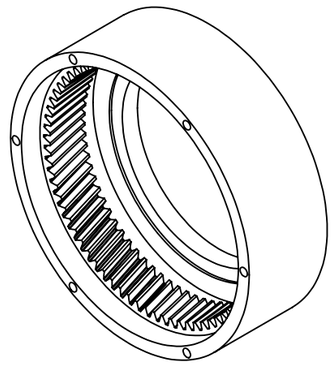

GEAR NOMINALS - HOLD	
PARAMETER	VALUE / BASIS
Tooth count / hand	72 / RH
Normal / transv. module	1.250 / 1.294095
Normal / transv. pressure	20.00 / 20.6469 deg
Reference helix	15.00 deg RH
Reference / base diameter	93.175 / 87.190
Tip / root diameter	90.675 / 96.300
Flank face width	16.00
Transv. reference thickness	1.88276 source
Radial tooth depth	2.812
Shift / root blend	0 source / R0.20 source
Accuracy / finish	HOLD - qualify process

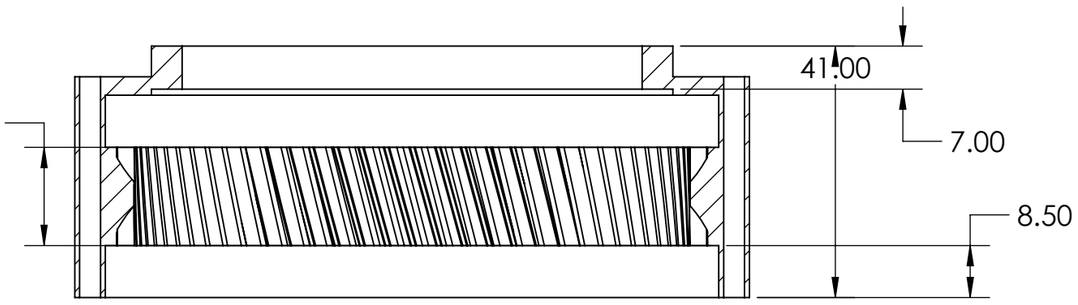

SECTION A-A

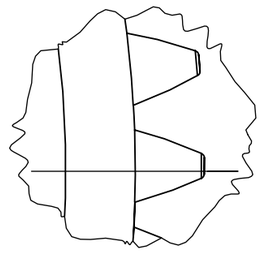

TOOTH INSPECTION	
CHECK	METHOD / STATUS
Profile / lead	Gear CMM; grade hold
Pitch / runout	Index / datum setup hold
Tooth thickness	Span or pins; limits hold
Mesh	Roll test and hot backlash

PLA TRIAL OR CNC ROUTE TBD.

DIMENSIONS IN mm | ASME Y14.5-2018

INSPECT FLANK PROFILE, HELIX AND PITCH TO CONTROLLED MODEL.
REPORT TOOTH THICKNESS AND INSTALLED MESH. GRADE UNASSIGNED.

6X Ø3.40 through main flange on Ø105 PCD.
Stepped bores: Ø75 / Ø85 / Ø100; follow controlled profile.
Ring teeth occupy Z0 to Z16. Inspect phase to mounting holes.

CONTROLLED P0 CAD: Stage2_Ring_72T.SLDPRT / DEFAULT

DETAIL T
SCALE 4 : 1

	NAME	SIGNATURE	DATE
DRAWN			
CHK'D			
APPV'D			
MFG			
Q.A			

DO NOT SCALE DRAWING | REVISION: E03-D1

TITLE: STAGE 2 RING GEAR

MATERIAL: TBD

DWG NO. PD-G2R

A3

SCALE:1:1 | SHEET 1 OF 1

SOLIDWORKS Educational Product. For Instructional Use Only.

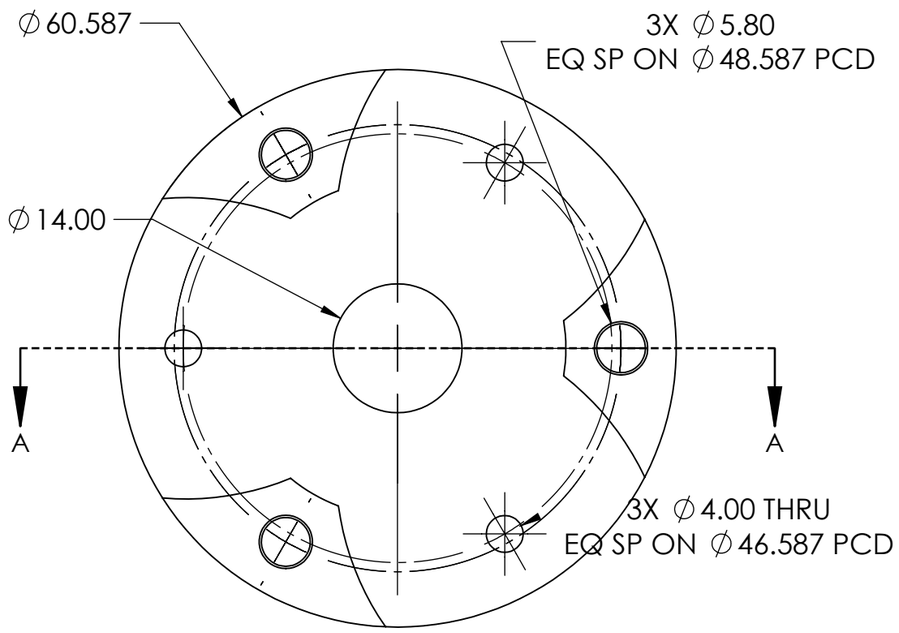

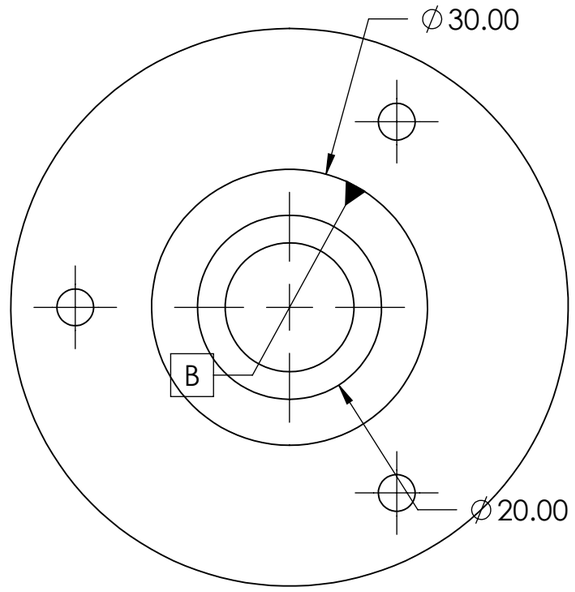

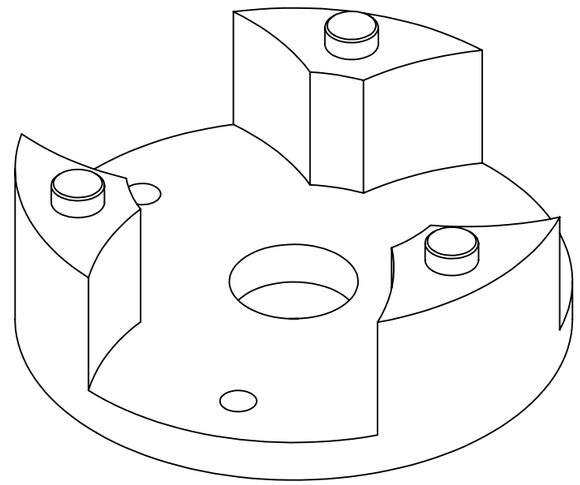

TOP | 1.5:1

UNDERSIDE | 1.5:1

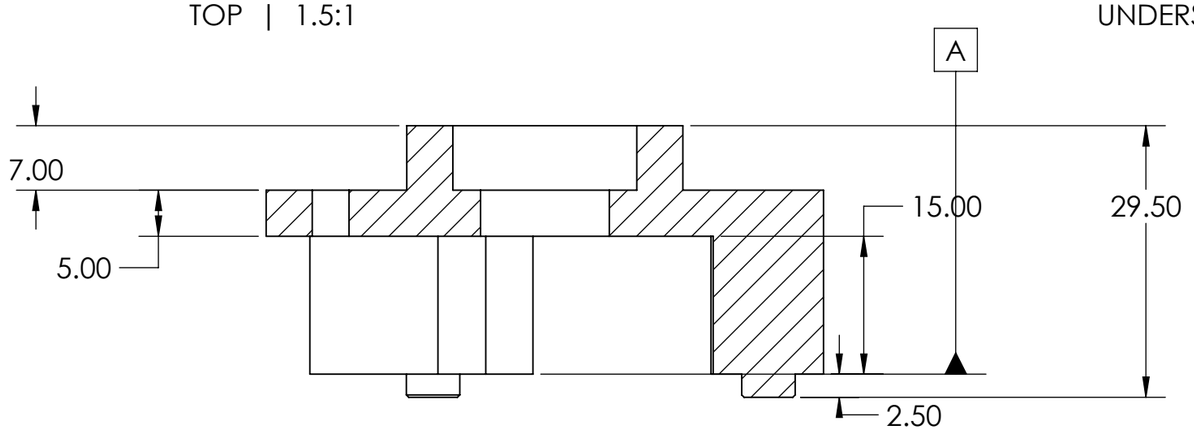

SECTION A-A
SCALE 1.5 : 1

INSPECT PLANET AXES FROM THE INSTALLED SUN AXIS.

3X PIN TIP CHAMFER 0.25 X 45 DEG. PATTERNS 60 DEG APART.
TOWER CONTOUR: LINKED DEFAULT MODEL; PROFILE LIMIT ON HOLD.

DIMENSIONS IN mm | ASME Y14.5-2018

THIRD ANGLE

	NAME	SIGNATURE	DATE
DRAWN			
CHK'D			
APPV'D			
MFG			
Q.A			

MATERIAL: TBD (CNC)

DO NOT SCALE DRAWING | REVISION: E03-D1

TITLE: STAGE 1 CARRIER

DWG NO. PD-S1C-CNC | A3

SCALE:1:1 | SHEET 1 OF 1

SOLIDWORKS Educational Product. For Instructional Use Only.

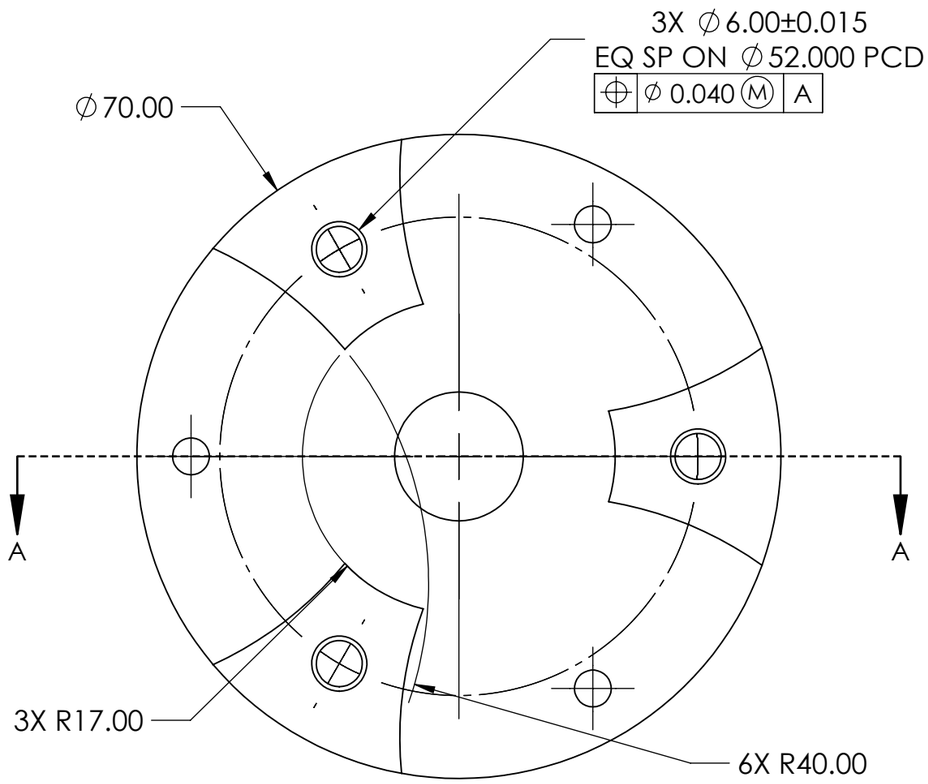

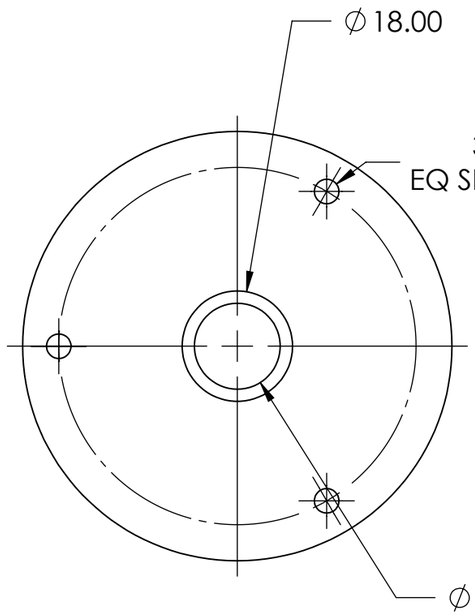

UNDERSIDE | 1:1

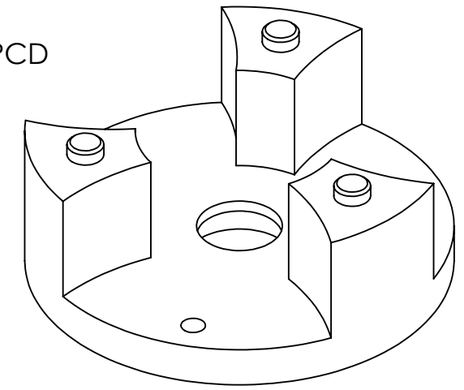

ISOMETRIC | 1:1

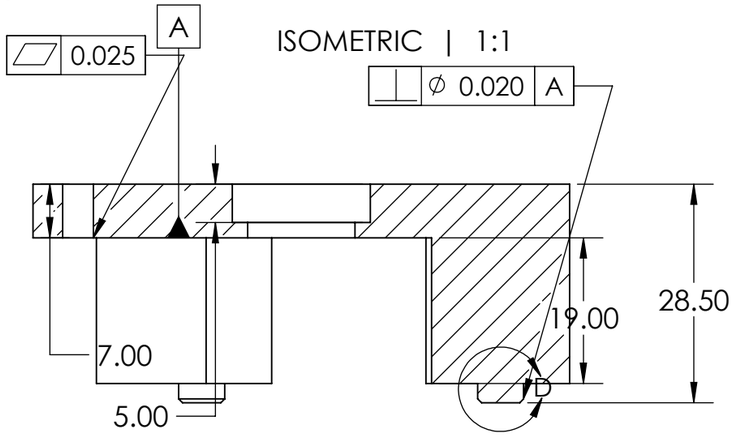

SECTION A-A
SCALE 1.25 : 1

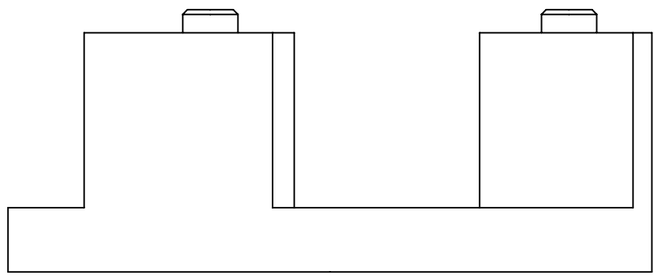

TOP AND FRONT | 3:2

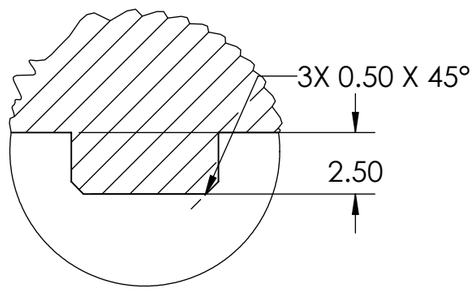

DETAIL D
SCALE 4 : 1

CNC CAPABILITY TRIAL
Qualify machining, inspection and material condition.
Check three-pin assembly and seating before testing.

60 DEG NOMINAL CLOCKING. GAGE WITH MATCHED OUTPUT DRUM.

DIMENSIONS IN mm. INTERPRET PER ASME Y14.5-2018.
PROPOSED TRIAL LIMITS. DO NOT RELEASE.

THIRD ANGLE

DO NOT SCALE DRAWING | REVISION: E03-D1

	NAME	SIGNATURE	DATE
DRAWN	CAD AUTO		26-11-25
CHK'D			
APPV'D			
MFG			
Q.A			

MATERIAL: AISI 4140

TITLE: STAGE 2 PLANET CARRIER

DWG NO. PD-S2C-4140 | A3

SCALE:1:1 | SHEET 1 OF 1

SOLIDWORKS Educational Product. For Instructional Use Only.

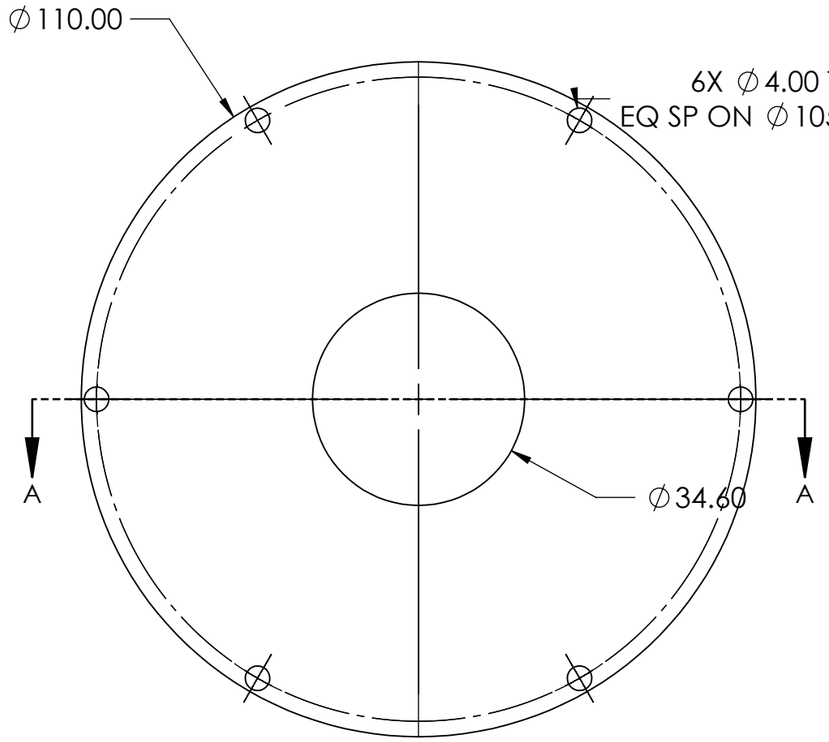

TOP | 1:1

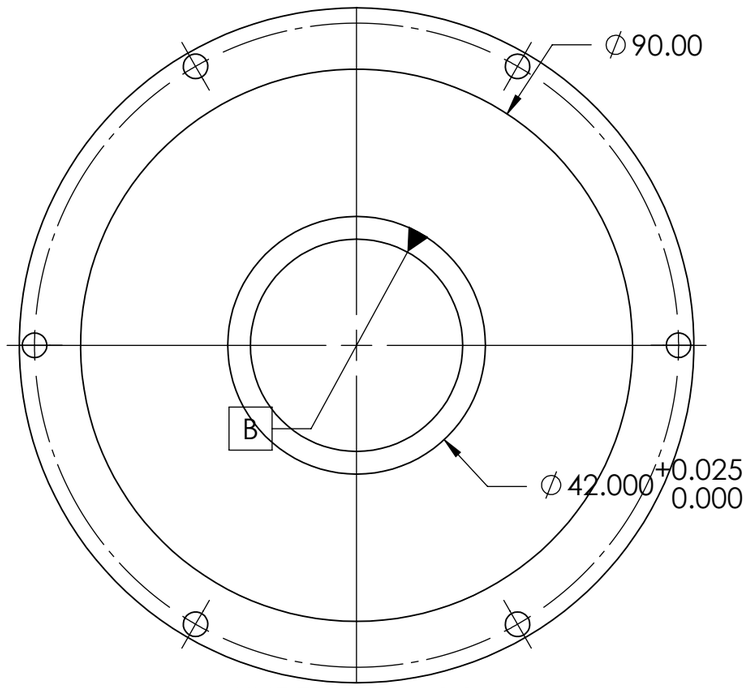

UNDERSIDE | 1:1

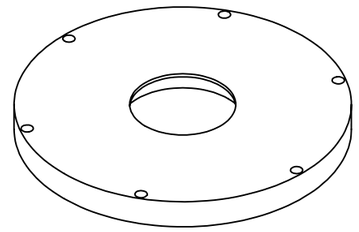

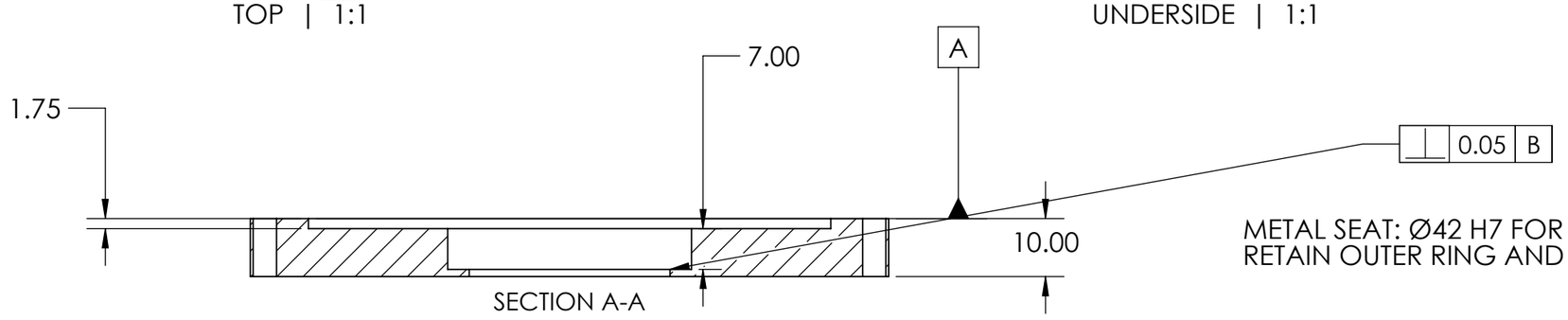

SECTION A-A

METAL SEAT: Ø42 H7 FOR STATIONARY OUTER-RING LOAD.
RETAIN OUTER RING AND CHECK INSTALLED RADIAL CLEARANCE.

CNC TRIAL: OUTER-RACE SHOULDER ORIENTATION TO SEAT AXIS.

6806-2RS SIZE CLASS: 30 X 42 X 7. SEAL TYPE AND FIT LIMITS OPEN.

NOMINAL SEAT CORRECTION FOR CAD REVIEW.
APPROVE SUPPLIER BEARING, RETENTION AND FITS BEFORE TRIAL.
QUALIFY FDM BORE FINISH AND FASTENER LIGAMENT.

DIMENSIONS IN mm | ASME Y14.5-2018

THIRD ANGLE

	NAME	SIGNATURE	DATE
DRAWN			
CHK'D			
APPV'D			
MFG			
Q.A			

DO NOT SCALE DRAWING | REVISION: E03-D1

TITLE: OUTPUT HOUSING

MATERIAL: PLA FDM TRIAL

DWG NO. PD-OH | A3

SCALE:1:1 | SHEET 1 OF 1

SOLIDWORKS Educational Product. For Instructional Use Only.