V2-B | STAGE 1 MOTOR INTERFACE CORRECTED IN CAD

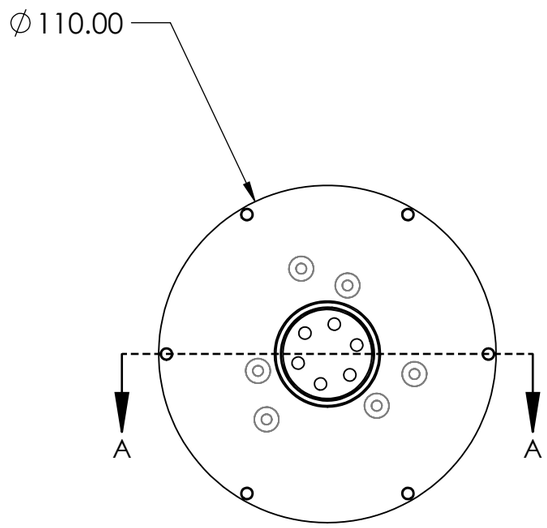

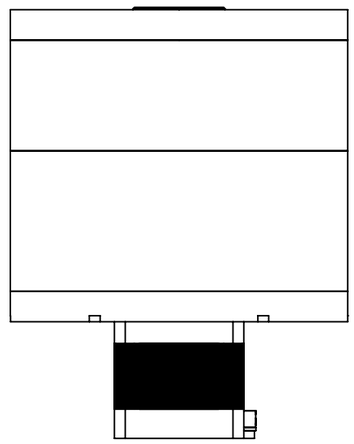

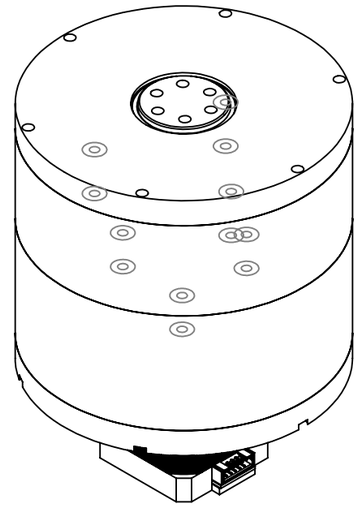

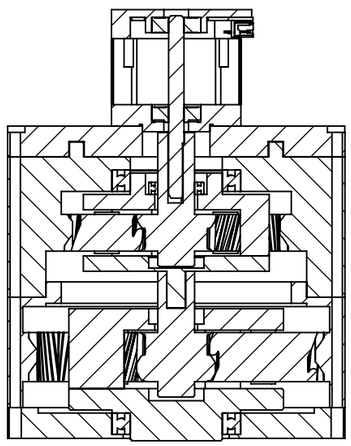

SECTION A-A

AXIAL LENGTH 103.75 mm EXCLUDING MOTOR.
AXIAL LENGTH 140.55 mm INCLUDING MOTOR.
FIXED RINGS, NOMINAL 20:1 REDUCTION.

SUN V2-B: TRIMMED NOSE AND ROUND LEAD.
CHECK ACTUAL SHAFT ENGAGEMENT AND CORNER CLEARANCE.

OUTPUT BEARING SIZE CLASS 6806, 30 X 42 X 7.
PURCHASED SEAL TYPE AND RETENTION REQUIRE VERIFICATION.

	NAME	SIGNATURE	DATE
DRAWN			
CHK'D			
APPV'D			
MFG			
Q.A			

DO NOT SCALE DRAWING | REVISION: V2-B-D1

TITLE: PLANETARY GEARBOX

MATERIAL: SEE COMPONENT DRAWINGS

DWG NO. PD-ASM | A3

SCALE:1:2 | SHEET 1 OF 3

SOLIDWORKS Educational Product. For Instructional Use Only.

BASELINE: 4.00 mm SEAT.
0.75 mm LIP OVERLAP.

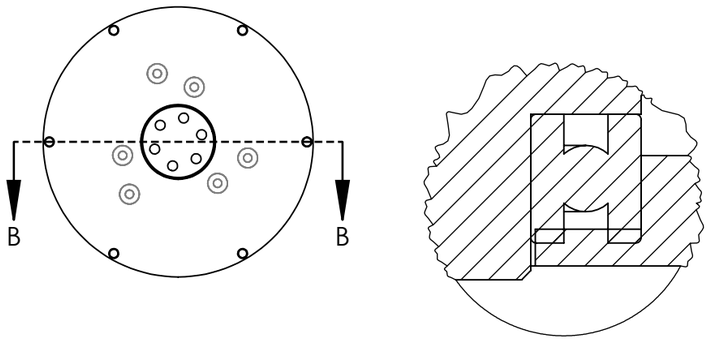

DETAIL D
SCALE 3 : 1

P1: 7.00 mm NOMINAL SEAT.
Ø34.60 EXIT. FIT AND RETENTION OPEN.

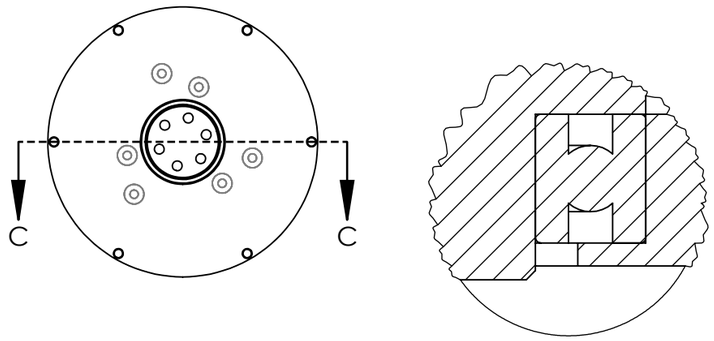

DETAIL E
SCALE 3 : 1

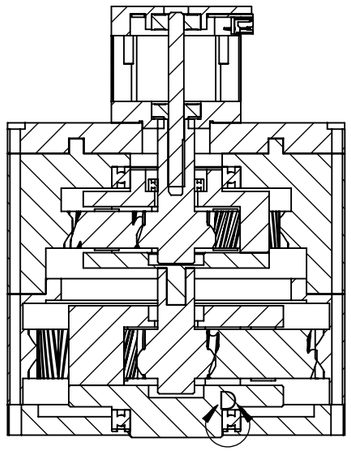

SECTION B-B

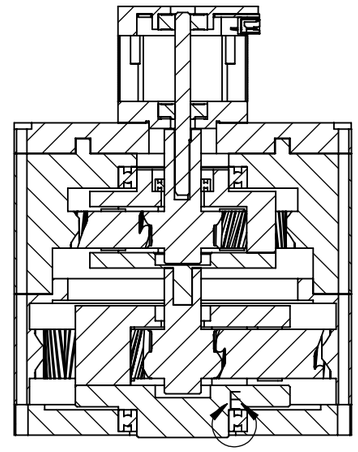

SECTION C-C

					DO NOT SCALE DRAWING	REVISION
						V2-B-D1
	NAME	SIGNATURE	DATE		TITLE: PLANETARY GEARBOX	
DRAWN						
CHK'D						
APPV'D						
MFG						
Q.A				MATERIAL: SEE COMPONENT DRAWINGS	DWG NO. PD-ASM	A3
					SCALE:1:2	SHEET 2 OF 3

SOLIDWORKS Educational Product. For Instructional Use Only.

BILL OF MATERIALS

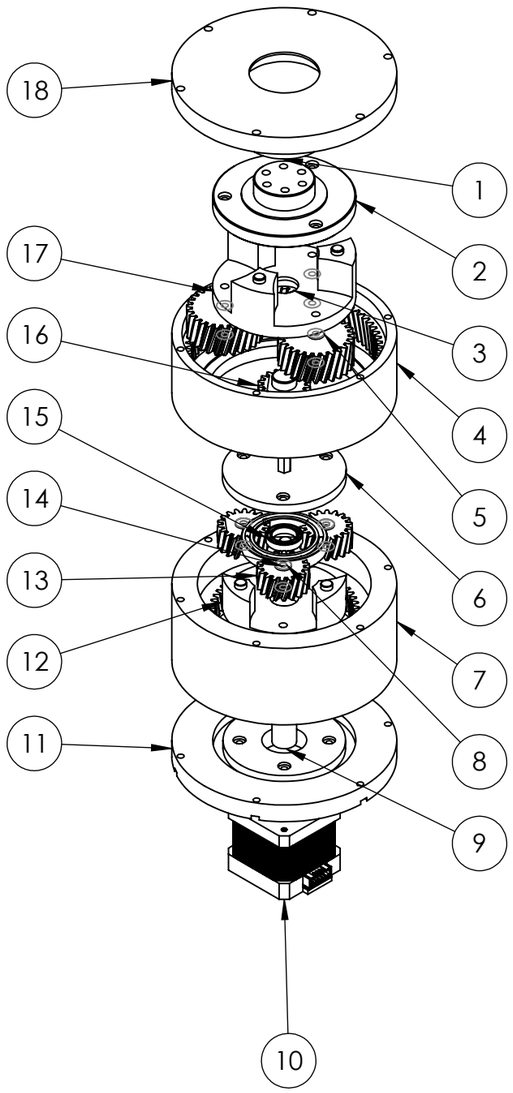

ITEM NO.	PART NUMBER	DESCRIPTION	QTY.
1	ISO 15 RBB - 1830 - 26,SI,NC,26_68		2
2	PLN-V2 Stage_2_Output		1
3	PLN-V2 Stage2_Planet_27T		3
4	PLN-V2 Stage2_Ring_72T		1
5	PLN-V2 1mm gear spacetr		6
6	PLN-V2 first stage carrier 2		1
7	PLN-V2 Stage1_Ring_Gear		1
8	PLN-V2 1mm gear spacetr		6
9	PLN-V2 Stage1_Sun_Gear		1
10	PLN-V2 nema17_17HS4401_b		1
11	PLN-V2 motor mount (planetary)		1
12	PLN-V2 first stage carier		1
13	PLN-V2 Stage1_Planet_Gear		3
14	PLN-V2 bushing		6
15	ISO 15 RBB - 1712 - 20,SI,NC,20_68		1
16	PLN-V2 Stage2_Sun_18T		1
17	PLN-V2 2nd stage carrier		1
18	PLN-V2 P10 output_housing		1

ITEM 5: STAGE_2 SPACER, 3.75 mm.
ITEM 8: DEFAULT SPACER, 1.75 mm.

SEE PLANETARY GEARBOX ASSEMBLY PROCEDURE.

	NAME	SIGNATURE	DATE
DRAWN			
CHK'D			
APPV'D			
MFG			
Q.A			

DO NOT SCALE DRAWING | REVISION: V2-B-D1

TITLE: PLANETARY GEARBOX

MATERIAL: SEE COMPONENT DRAWINGS

DWG NO. PD-ASM

A3

SCALE:1:2 | SHEET 3 OF 3

SOLIDWORKS Educational Product. For Instructional Use Only.