

EX-R SERIES

EXPLOSION-PROOF LIGHT

Class I Division 2, Class II Division 2, Zone 1 & 2, Zone 21 & 22

INTRODUCTION

The FGE-EX-R2 / R4 Series Explosion-Proof Lighting is a round LED fixture combining high brightness and rugged construction for industrial hazardous areas. Its die-cast aluminum housing and impact-resistant lens deliver excellent protection against explosion, vibration, and corrosion.

Providing up to 170 lm/W efficiency, the R2/R4 Series offers uniform light distribution suitable for tank farms, refineries, and marine zones.

Multiple installation options—ceiling, rope, pole mount—allow flexible deployment in diverse environments.



R2 (clear)



R2 (diffuse)



R4 (clear)



R4 (diffuse)

COMPLIANCE

UL844 Hazardous Locations
Class I, Division 2, Groups A, B, C, D
Class II, Division 1, Groups E, F, G
Class II, Division 2, Groups F, G
Class III
Class I, Zone 2 Group IIC
UL 1598 Luminaires
UL 1598A Marine Outside Type
UL 8750 LED Safety
UL924 Emergency Lighting
ATEX Marking (Certificate Number:
CSANe 23ATEX1213X):
Ex II 3GD
Ex db ec IIC T6/T5 GC
Ex tC IIIC T80°C/T95°C DC

cULus LISTED · NOM · HazLoc · ABS · IP66 IK08

LM-79 · LM-80 · TM-21 · ISTMT · IEC

FEATURES

150 lm/W
170 lm/W

High Efficacy & Energy Saving: Up to 150 lm/W, 170 lm/W, reducing energy consumption by over 60% compared with

EMERGENCY BACKUP

90-Minute Emergency Backup Option: Ensuring safety and visibility during critical moments.

0-10V DIMMABLE

Smart Control Ready: Supports 0-10V/DALI dimming.

RELIABLE WARRANTY

Reliable Warranty: 5 Years Warranty.

3 POWER SELECTABLE

Power Selectable: Multi-wattage options in a single fixture for flexible applications and reduced inventory.

CCT SELECTABLE

CCT Selectable: Adjustable color temperature to suit diverse environments.

- **Robust Protection:**
  IP66 waterproof & dustproof, IK08 impact resistance for harsh industrial environments.
- **Superior Thermal Management:**
  Stainless steel housing, great corrosion resistance and cooling performance.
- **Versatile Mounting Options:**
  Ceiling, rope, and pole for flexible installation.
- **Wide Input Voltage:**
  AC120-277V, suitable for global power grids.

APPLICATIONS



Paper Mills: Providing safe and stable illumination in dust-rich environments to reduce ignition risks and support continuous operation.

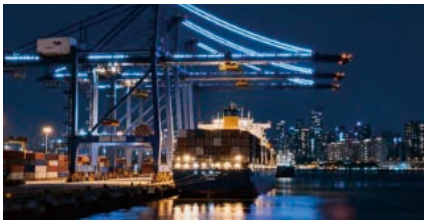

Loading Dock Platforms: Delivering durable explosion-proof lighting to withstand vibration and fuel vapors for safer loading and unloading operations.



Chemical Processing Facilities: Ensuring reliable lighting in areas with volatile chemicals to maintain safety and compliance under hazardous conditions.



Coal Mine: Offering explosion-proof illumination for methane- and dust-prone mining zones to protect workers during underground operations.



Power Plants: Providing robust lighting around high-risk equipment to support safe inspection and maintenance in demanding conditions.



Heavy Industrial Facilities: Delivering long-lasting explosion-proof lighting for harsh industrial sites exposed to dust, oil mist, and mechanical impact.

TECHNICAL PARAMETERS

Product Model	EX-R2	EX-R4
Electrical Performance		
Wattage	20W/30W/40W	30W/40W/50W/60W
Input Voltage	AC120-277V	AC120-277V
Frequency	50/60Hz	50/60Hz
Power Factor (PF)	>0.9	>0.9
Surge Protection	4 kV	4 kV
THD	<20%	<20%
Optical Performance		
Luminous Efficacy	150 lm/W	150 lm/W
Luminous Flux	3000/4500/6000lm	4500/6000/7500/9000lm
CCT	2700K/4000K/5000K Options	2700K/4000K/5000K Options
CRI	Ra>80	Ra>80
Beam Angle	120°	120°
Unified Glare Rating (UGR)	20	20
Reliability		
Lifetime	50,000 h	50,000 h
Operating Temperature	-40°C to 60°C for T6/T80°C	-40°C to 60°C for T6/T80°C
Storage Temperature	-40°C to 70°C	-40°C to 70°C
Ingress Protection	IP66	IP66
Impact Resistance	IK08	IK08
Control		
Dimming	0-10V Dimming	0-10V Dimming
Sensor	-	-
Communication Protocol	-	-
Emergency Kit	Optional	Optional
Mechanical		
Housing Material	SUS304 stainless steel	SUS304 stainless steel
Lens Material	Clear fiberglass-reinforced polycarbonate	Clear fiberglass-reinforced polycarbonate
Coating	Grey/RAL7040	Grey/RAL7040
Net Weight	5.2kg	8.92kg
Dimensions	698x225x133.5mm	1302x225x149.5mm
Warranty	5 Years	5 Years

Power and CCT Selectable

Product Model	EX-40W/30W/20W	EX-60W/50W/40W
Electrical Performance		
Wattage Selectable	40W/30W/20W	60W/50W/40W
Input Voltage	AC120-277V	AC120-277V
Frequency	50/60Hz	50/60Hz
Power Factor (PF)	>0.9	>0.9
Surge Protection	4 kV	4 kV
THD	<20%	<20%
Optical Performance		
Luminous Efficacy	170 lm/W	170 lm/W
Luminous Flux	6800lm/5100lm/3400lm	10200lm/8500lm/6800lm
CCT Selectable	4000K/5000K/6500K	4000K/5000K/6500K
CRI	Ra>80	Ra>80
Beam Angle	120°	120°
Unified Glare Rating (UGR)	20	20
Reliability		
Lifetime	50,000 h	50,000 h
Operating Temperature	-40°C to 60°C for T6/T80°C	-40°C to 60°C for T6/T80°C
Storage Temperature	-40°C to 70°C	-40°C to 70°C
Ingress Protection	IP66	IP66
Impact Resistance	IK08	IK08
Control		
Dimming	0-10V Dimming	0-10V Dimming
Sensor	-	-
Communication Protocol	-	-
Emergency Kit	Optional	Optional
Mechanical		
Housing Material	SUS304 stainless steel	SUS304 stainless steel
Lens Material	Clear fiberglass-reinforced polycarbonate	Clear fiberglass-reinforced polycarbonate
Coating	Grey/RAL7040	Grey/RAL7040
Net Weight	5.2kg	8.92kg
Dimensions	698x225x133.5mm	1302x225x149.5mm
Warranty	5 Years	5 Years

PHOTOMETRICS

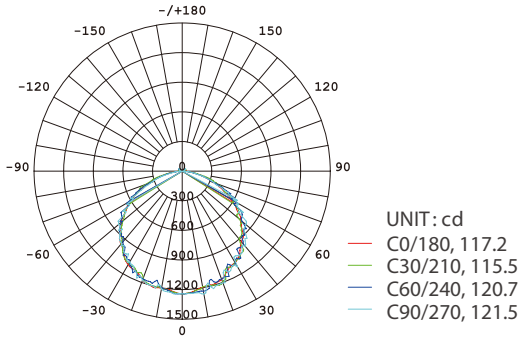

AVERAGE BEAM ANGLE(50%):
118.7 DEG

120°

MECHANICAL DIMENSIONS

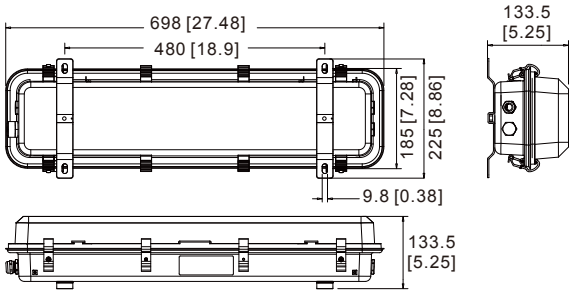

20W/30W/40W

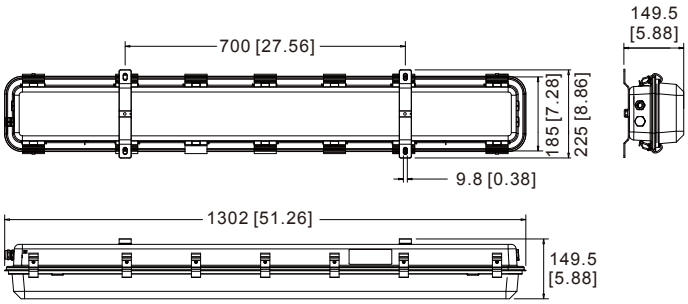

30W/40W/50W/60W

Product Model	EX-R2	EX-R2 (Emergency)	EX-R4	EX-R4(Emergency)
Wattage	20W/30W/40W	20W/30W/40W	30W/40W/50W/60W	30W/40W/50W/60W
Outer box (L*W*H)	800x250x175mm(31.49"x9.84"x6.89")	800x250x175mm(31.49"x9.84"x6.89")	1400x250x175mm(55.12"x9.84"x6.89")	1400x250x175mm(55.12"x9.84"x6.89")
Q'ty/Ctn	1pc	1pc	1pc	1pc
N.W./Ctn	5.27kg/11.6lbs	6.5kg/4.33lbs	8.92kg/19.67lbs	10.2kg/22.49lbs
G.W./Ctn	6.55kg/14.44lbs	7.43kg/16.38lbs	11.2kg/24.69lbs	11.54kg/25.44lbs
Remarks	0.7M cable	0.7M cable	0.7M cable	0.7M cable

EMERGENCY SPECIFICATIONS

FOR CLASS I, DIVISION 2

Emergency Driver Model	EM-15W-HL
Input Rating	120-277Vac, 50/60Hz, Max.100mA, Max.7W
Output Rating	25-55Vdc, Constant wattage 15W
Charge Time	24 hours
Emergency Run Time	3 hours
Response Time	＜550mS
Rated Ambient Temperature	0°C to 60°C
Battery Life Expectancy	3 years

CAUTION: Sealed unit. Battery not replaceable. Replace entire unit when necessary.

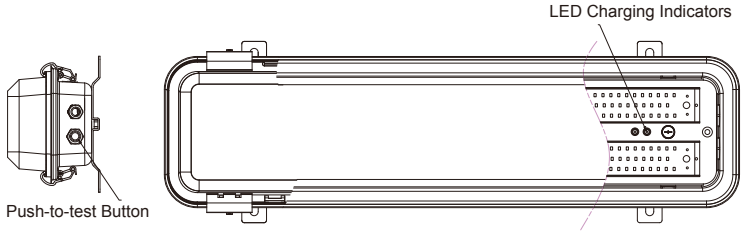

Indicator Information

Operate Mode / LED Features		YELLOW LED (State LED)	Green LED (Indicate LED)
Charge Mode	Charging		Flash 0.2HZ (5S/time)
	Fully charged		ON
Discharge Mode	Discharge		Flash 1HZ (1S/time)
	Discharge cut-off		OFF
Battery disconnect		Flash 2HZ (0.5S/time)	
LED Lamp disconnect		Flash 2HZ (0.5S/time)	
Battery under voltage		Flash 1HZ (1S/time)	
Battery over voltage		Flash 1HZ (1S/time)	
Function test beginning (once a month)			Flash 2HZ (0.5S/time), flash 5 times
Under function test			Flash 1HZ (1S/time)
Function test failed		Flash 0.5HZ (2S/time)	
Discharge duration test beginning (once a year)			Flash 2HZ (0.5S/time), flash 7 times
Under discharge duration test			Flash 1HZ (1S/time)
Discharge duration test failed		Flash 0.5HZ (2S/time)	

FOR ZONE 2

Input Rating	120-270Vac, 50/60Hz, THD ≤ 20%, PF ≥ 0.9, Input Current Max.0.6A
Input Power	10-50W
Output Rating	28-50Vdc
Emergency Power	8W
Battery	Lithium
Emergency Run Time	3 hours
Response Time	≤ 1 second
Charge Time	≥ 24 hours
Battery Life Expectancy	5 years
Ambient Temperature	-10°C to +60°C

CAUTION: Sealed unit. Battery not replaceable. Replace entire unit when necessary.

MOUNTING METHODS

Options	Description	Kit (mm[inch])	Installed
Ceiling Mount	Provided with two stainless steel mounting kits welded at the back of housing	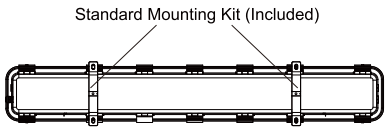	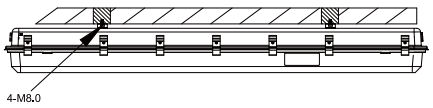
Rope Mount	Provided with two stainless steel wire. Measured1mm diameter	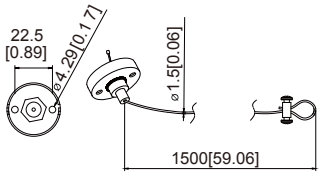	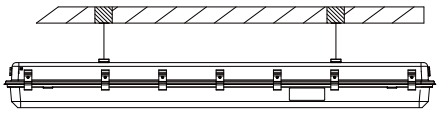
Pole Mount	(1) 155° pipe (2) Pipe clamp bracket	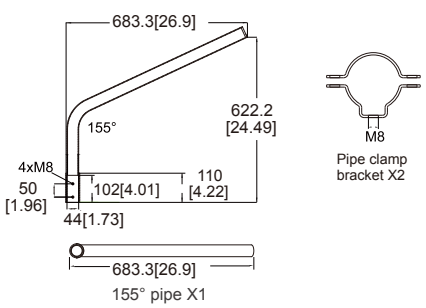	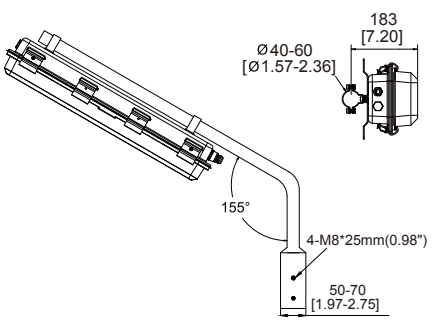

Note: (1) Mounting screws not provided. (2) Ordered separately, field installed.

POWER & CCT SELECTABLE

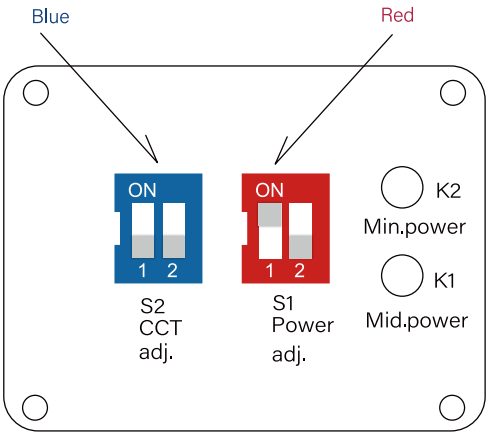

Power Selectable	CCT Selectable
40W/30W/20W	4000K/5000K/6500K
60W/50W/40W	4000K/5000K/6500K

Operating Instructions

- S1 DIP switch - Red (S1 Power adj.)

The luminaire incorporates a dual-dial power configuration switch enabling three selectable output ratings. Factory default settings and power levels can be customized based on project requirements.

1. Maximum Output (100% nominal power)
Switch configuration: Dial 1 = OFF, Dial 2 = OFF;



60W

2. Medium Output (70%-90% of nominal power, depending on specification)Switch configuration: Dial 1 = ON, Dial 2 = OFF



50W

3. Minimum Output (50%-70% of nominal power, depending on specification)Switch configuration: Dial 1 = OFF, Dial 2 = ON



40W

- S2 DIP switch - Blue (S2 CCT adj.)

The luminaire incorporates a dual-dial power configuration switch enabling three preset color temperature options. The factory default setting can be customized according to order requirements.

1. Cool white, e.g. 6500K
Switch configuration: Dial 1 = OFF, Dial 2 = OFF



6500K

2. Neutral white, e.g. 5000K
Switch configuration: Dial 1 = ON, Dial 2 = OFF



5000K

3. Warm white, e.g. 4000K
Switch configuration: Dial 1 = ON, Dial 2 = ON



4000K

ORDER INFORMATION

EX-YY-YY-YY-YY

1 2 3 4 5 6 7 8 9

1 EX = Explosion Proof Light

2 Wattage

10	10W
20	20W
30	30W
36	36W
40	40W
50	50W
60	60W

3 Shell Shape Series

R2	R2
R4	R4

4 Color Temperature

27	2700K
40	4000K
50	5000K

5 Dimmable

D	0-10V Dimming

6 Optics

120	120°

7 EM Back-up

(Blank)	Without EM Back-up
EM	With EM Back-up

8 Mounting Means

C	Ceiling or Wall mount
R	Rope mount
P	Pole mount

9 Options

(Blank)	0.7M cord

WARRANTY PERIOD
5 YEARS WARRANTY

WARRANTY COVERAGE
LED LIGHT SOURCE, DRIVER

24h
AFTER-SALES SERVICE COMMITMENT
24H RESPONSE

72h
AFTER-SALES SERVICE COMMITMENT
72H RESOLUTION/REPLACEMENT