V2-C | CYCLOIDAL GEARBOX

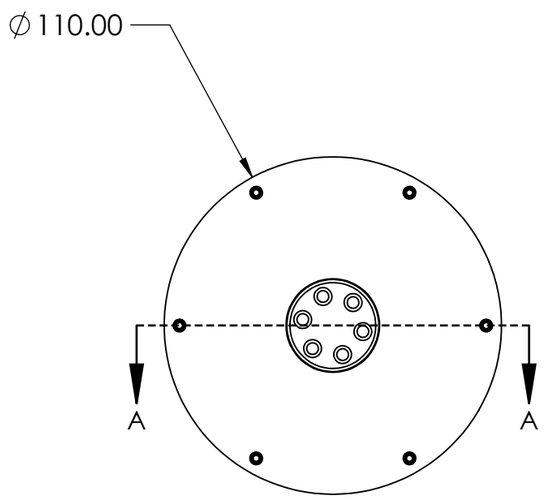

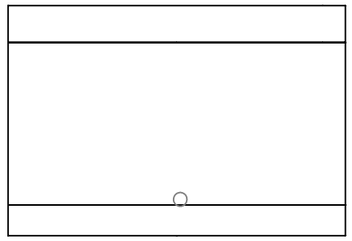

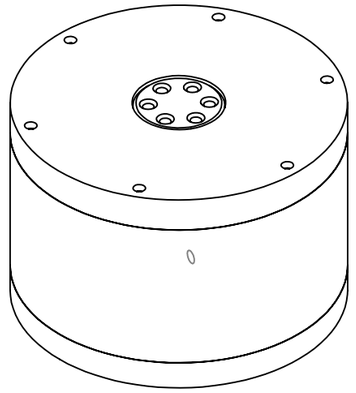

DUAL 19-LOBE DISCS. 20 UNIQUE ROLLER STATIONS.
THEORETICAL REDUCTION 19:1; OUTPUT ROTATION REVERSED.

HOUSING Ø110 NOMINAL. AXIAL LENGTH 75 mm EXCLUDING MOTOR.
REFERENCE Y = 0 AT MOTOR-MOUNT INNER FACE.

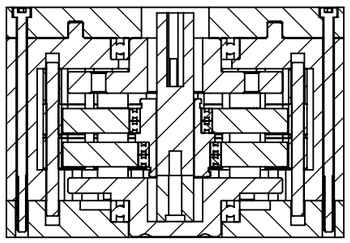

SECTION A-A

DISCS: Y23–31 AND Y34–42 mm. INTER-DISC GAP 3.00 mm.
SEE THE BEARING AND DRIVE INTERFACE SHEET FOR DETAILS.

20 FIXED STATIONS. UPPER SHIM CYC-SPR-003C.
SELECT SHIMS FOR 0.05 TO 0.15 AXIAL FLOAT.

						DO NOT SCALE DRAWING	REVISION
						V2-C-D1	
	NAME	SIGNATURE	DATE			TITLE: CYCLOIDAL GEARBOX	
DRAWN							
CHK'D							
APPV'D							
MFG							
Q.A				MATERIAL: SEE PART DRAWINGS		DWG NO. CYC-ASM-001	A3
						SCALE:1:2	SHEET 1 OF 4

SOLIDWORKS Educational Product. For Instructional Use Only.

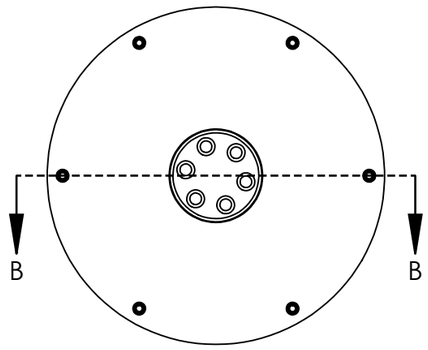

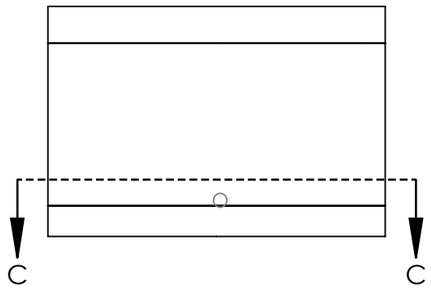

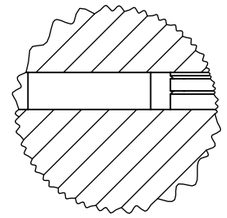

DETAIL D
SCALE 2 : 1

D OUTPUT DRIVE / DISC REGION

SELECT UPPER SHIM FROM THE MEASURED STACK GAP.
VERIFY RACE-ONLY SEATING AND POSITIVE AXIAL CAPTURE.

CAD NOMINAL BEARINGS: 6806 SIZE (30 X 42 X 7).
ECCENTRICS: MR6704 SIZE (20 X 27 X 4).
OUTPUT STACKS: MR106 SIZE (6 X 10 X 3).

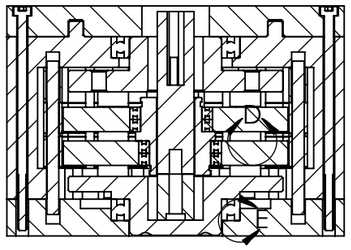

SECTION B-B

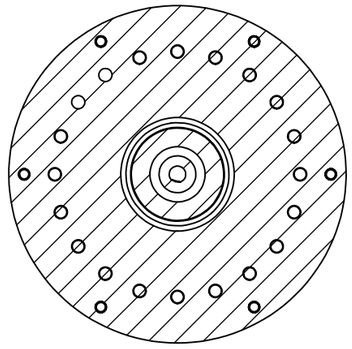

SECTION C-C

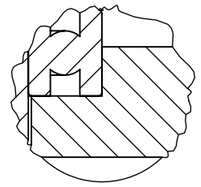

DETAIL E
SCALE 2 : 1

E OUTPUT BEARING REGION

COLD SET: 7.75 MIN OVERLAP AND 0.20 MIN EDGE MARGIN.
0.10 MAX RELATIVE AXIAL FLOAT. CHECK BOTH PUSHED POSITIONS.

	NAME	SIGNATURE	DATE
DRAWN			
CHK'D			
APPV'D			
MFG			
Q.A			

DO NOT SCALE DRAWING | REVISION: V2-C-D1

TITLE: CYCLOIDAL GEARBOX

MATERIAL: SEE PART DRAWINGS

DWG NO. CYC-ASM-001

A3

SCALE:1:2 | SHEET 2 OF 4

SOLIDWORKS Educational Product. For Instructional Use Only.

NATIVE BOM | DEFAULT

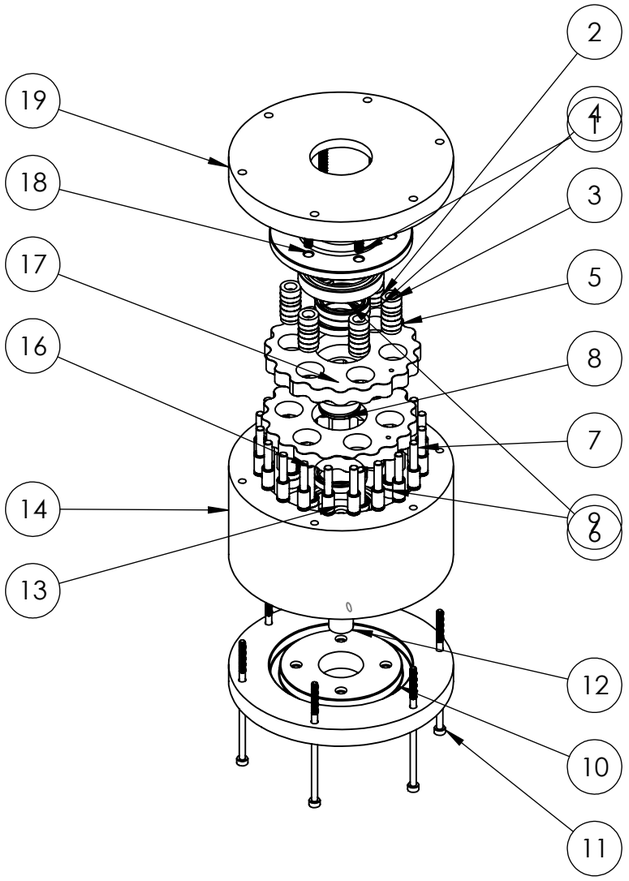

ITEM NO.	PART NUMBER	DESCRIPTION	QTY.
1	CYC-V2 m4 screw		6
2	CYC-V2 output spacers		6
3	CYC-V2 output spacers		6
4	CYC-V2 2mm bearing spacer		12
5	ISO 15 RBB - 276 - 16,SI,NC,16_68		24
6	ISO 15 RBB - 1720 - 28,SI,NC,28_68		4
7	CYC-V2 ROLLER SUBASSSEMBLYT		20
8	CYC-V2 CYC Dual Eccentric Journal		1
9	CYC-V2 output spacers		6
10	CYC-V2 motor mount		1
11	CYC-V2 Screw_DIN_912_M3x70_A2		6
12	CYC-V2 shaft adaptor		1
13	CYC-V2 input shaft endpiece		1
14	CYC-V2 housing		1
15	ISO 15 RBB - 1830 - 26,SI,NC,26_68		2
16	CYC-V2 output sleeve		6
17	CYC-V2 RotorV3		2
18	CYC-V2 flange		1
19	CYC-V2 output housing		1
20	CYC-V2 nema17_17HS4401_b		1
21	CYC-V2 flange END		1

BOM QUANTITY REFERS TO THE 20-STATION DOCUMENTATION ASSEMBLY.
SEE PART DRAWINGS FOR CONTROLLED GEOMETRY.

ITEMS 20 AND 21: SEE IDENTIFICATION SHEET.

	NAME	SIGNATURE	DATE
DRAWN			
CHK'D			
APPV'D			
MFG			
Q.A			

DO NOT SCALE DRAWING | REVISION: V2-C-D1

TITLE: CYCLOIDAL GEARBOX

MATERIAL: SEE PART DRAWINGS

DWG NO. CYC-ASM-001

A3

SCALE:1:2 | SHEET 3 OF 4

SOLIDWORKS Educational Product. For Instructional Use Only.

COMPONENT IDENTIFICATION | SEE MAIN ASSEMBLY BOM

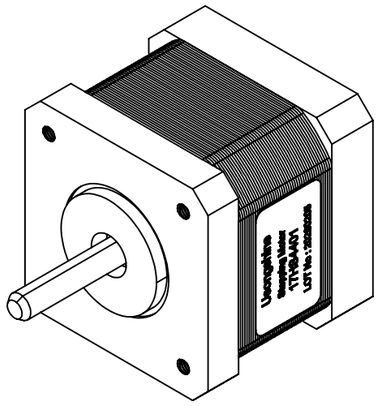

ITEM 20 NEMA 17 MOTOR
PURCHASED COMPONENT ENVELOPE

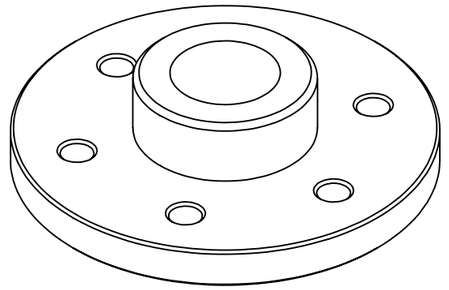

ITEM 21 INPUT FLANGE
SEE CYC-FLG-001

ITEM NUMBERS REFER TO THE EXPLODED ASSEMBLY BILL OF MATERIALS.

	NAME	SIGNATURE	DATE
DRAWN			
CHK'D			
APPV'D			
MFG			
Q.A			

DO NOT SCALE DRAWING | REVISION: V2-C-D1

TITLE: CYCLOIDAL GEARBOX

MATERIAL: SEE PART DRAWINGS

DWG NO. CYC-ASM-001

A3

SCALE:1:1 | SHEET 4 OF 4

SOLIDWORKS Educational Product. For Instructional Use Only.