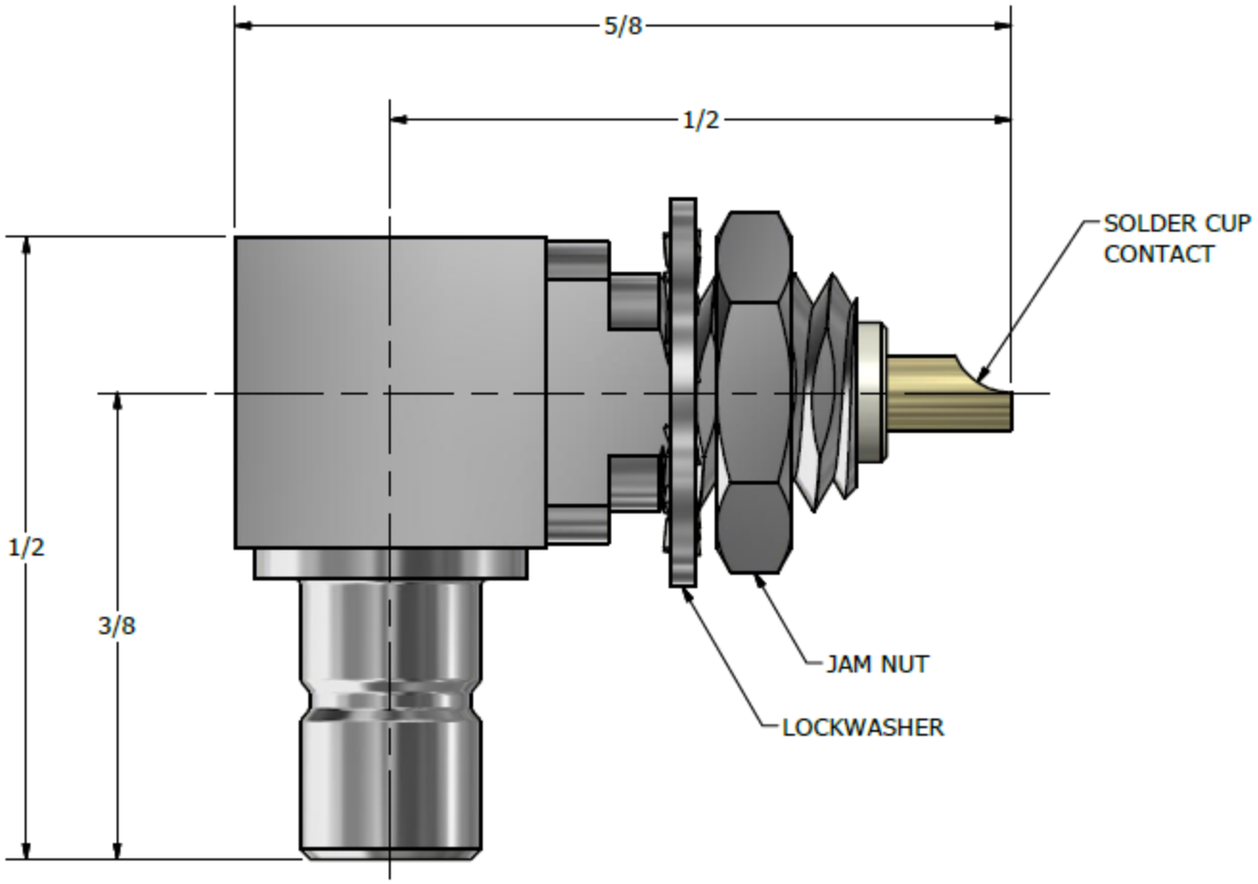

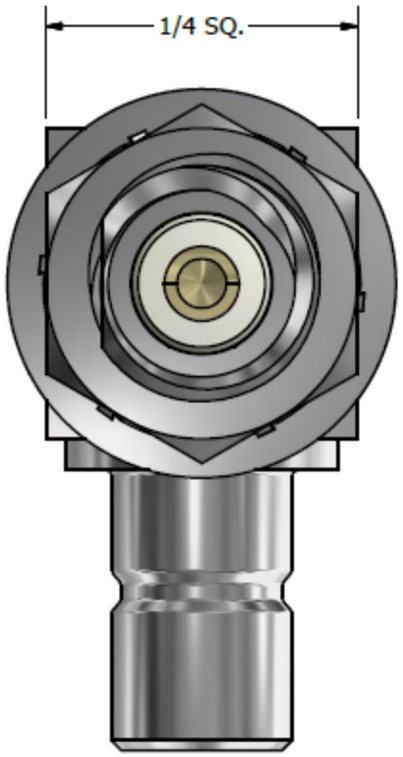

UNLESS OTHERWISE SPECIFICED

ALL DIMENSIONS ARE BEFORE PLATE
DIMENSIONS ARE IN INCHES TOLERANCES ON

FRACTIONS	DECIMALS 3PL	DECIMALS 2PL
± 1/64	± .005	±.010

SURFACE TEXTURE:

REMOVE ALL BURRS & SHARP EDGES

THREADS: PLATING ALLOWANCES ARE
.0002 MIN. .0003 MAX.

MATERIAL:

DRAWN	Steve	8/27/2015
CHECKED		
QA		
MFG		
APPROVED		
AREA: 2.021 in^2		
MASS: 2.782 g		

TED MANUFACTURING CORP.

TITLE

SMB RIGHT ANGLE PLANEL MOUNT RECEPTACLE

SIZE	DWG NO	REV
A3	8-60- SERIES	1

SCALE:

SHEET 1 OF 1