SELECTIVE UPPER ROLLER SHIM | mm | ASME Y14.5-2018

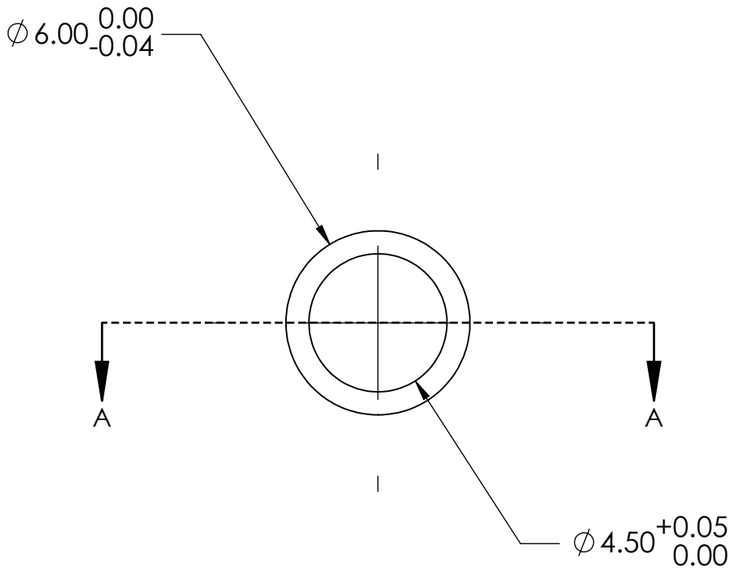

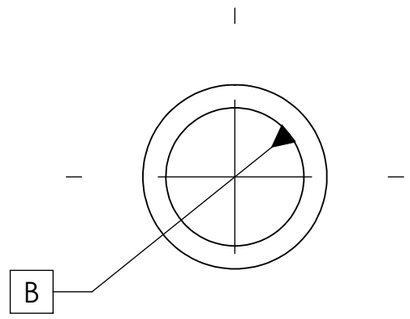



OPPOSITE END



SECTION A-A
SCALE 5 : 1

CHECK FACE PARALLELISM ON A SURFACE PLATE.

DEBURR WITHOUT RAISING EDGES.
SELECT FOR 0.05 TO 0.15 INSTALLED AXIAL FLOAT.

USE 0.40 NOMINAL AT 0.50 MEASURED GAP.

						DO NOT SCALE DRAWING	REVISION
							V2-C-D1
	NAME	SIGNATURE	DATE			TITLE:	UPPER ROLLER SHIM
DRAWN							
CHK'D							
APPV'D							
MFG							
Q.A				MATERIAL:	301 CRES SHIM STOCK	DWG NO.	CYC-SPR-003C A3
						SCALE:5:1	SHEET 1 OF 1

SOLIDWORKS Educational Product. For Instructional Use Only.