S-Band RHCP Wideband Omni Antenna
CSA-S-004-RH

Features

- Size < 1U
- Wide bandwidth for both TX and RX operations
- Omni-directional pattern
- Wide operating temperature range
- Designed to NASA GEVS (GSFC-STD-7000)
- TRL 9

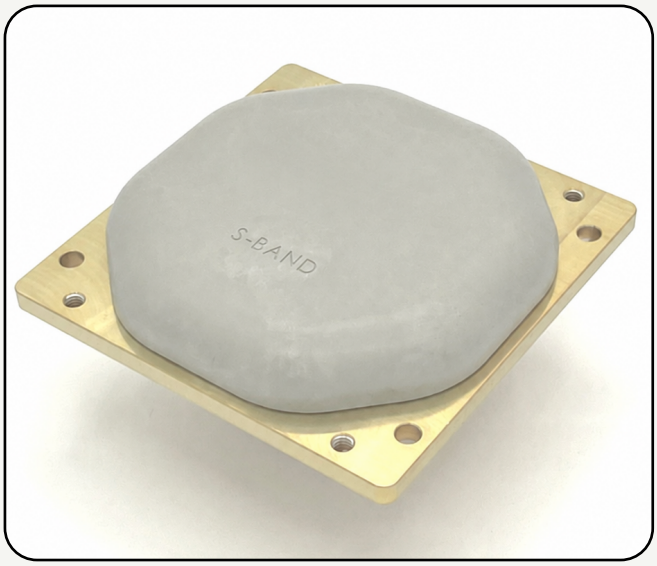

Advantages

- Commercial off-the-shelf (COTS)
- Acceptance tests available
- Compatible test hat available
- Qualified for space applications
- True circular polarization with extremely low axial ratio over the entire frequency band
- Consultation services available for link budget, architecture, and system design

A high-performance wideband antenna designed for TT&C applications in harsh space environments. It provides excellent axial ratio across the full frequency band, making it suitable for demanding and reliable space communication links.

This is a 2-in-1 antenna with wide bandwidth that allows simultaneous TX and RX operations on a single port, reducing the need for two separate antennas and cables.

This antenna is suitable for a variety of space applications, including LEO, MEO, and GEO. It is designed to address challenges present in the LEO environment over long mission lives, including corona, multipaction, atomic oxygen, and MMOD. It is lightweight and easy to integrate. It is also available with test hats to support testing and integration.

Electrical Specifications

Parameter/Condition	Min	Typical	Max	Unit
Operating Frequency	2025		2300	MHz
Polarization		RHCP		
Axial Ratio		2	3	dB
VSWR			2:1	
Gain	4.5	5.5	6.5	dBic
Pattern Coverage		Omni		
Half Power Beam Width	80	85	90	deg
Power Handling	20			W

Mechanical Specifications

Parameter/Condition	Value	Unit	Limits
Connector	SMA Female		
Mass	190	g	Max

Environmental Specifications

Parameter/Condition	Min	Typ	Max	Unit
LEO Mission Life	5			years
Operating Temperature	-70		100	°C
Storage Temperature	-70		100	°C
Humidity (MIL-STD-810 Method 507.6)	65%			
Sealing	Sealed + Venting Mechanism			
Multipactor Margin (Note 1)	10			dB
Vibration	14.1			GRMS

Note 1: Verified by simulation for 20W TX power

Random Vibration Test Levels
(GSFC-STD-7000)

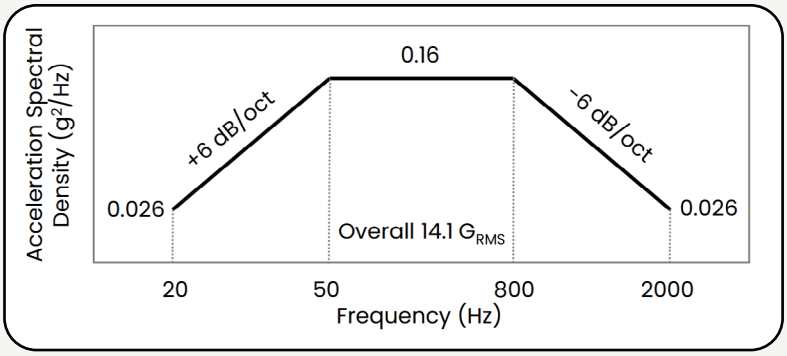

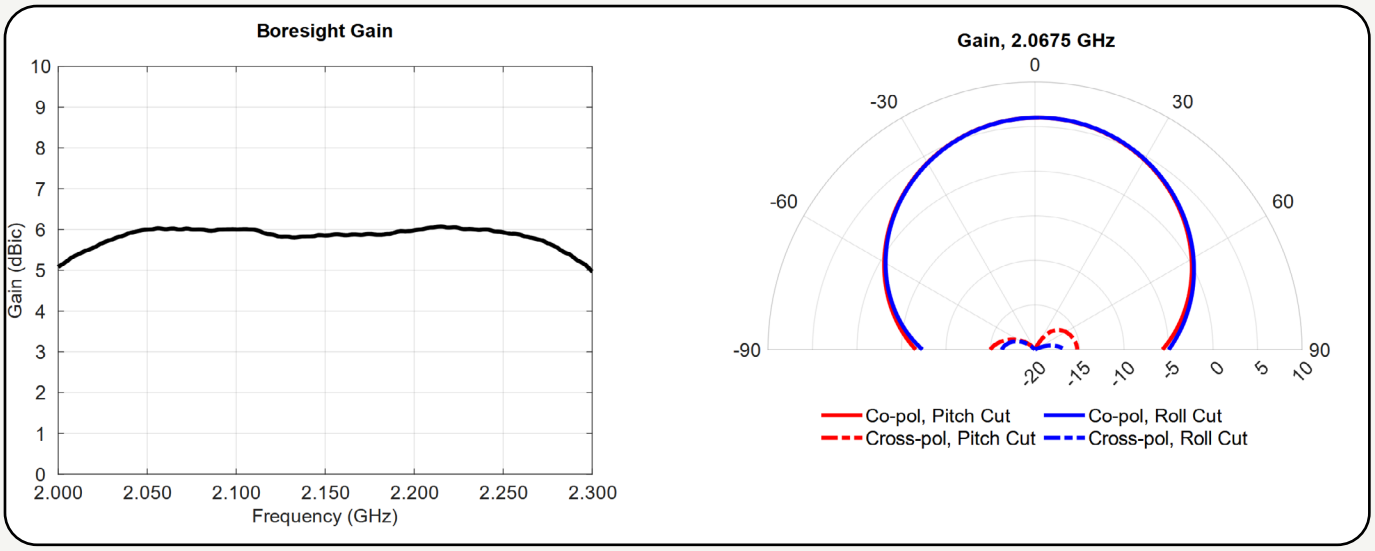
Boresight Gain
Gain (dBic)
Frequency (GHz)
Gain, 2.0675 GHz
Co-pol, Pitch Cut
Co-pol, Roll Cut
Cross-pol, Pitch Cut
Cross-pol, Roll Cut

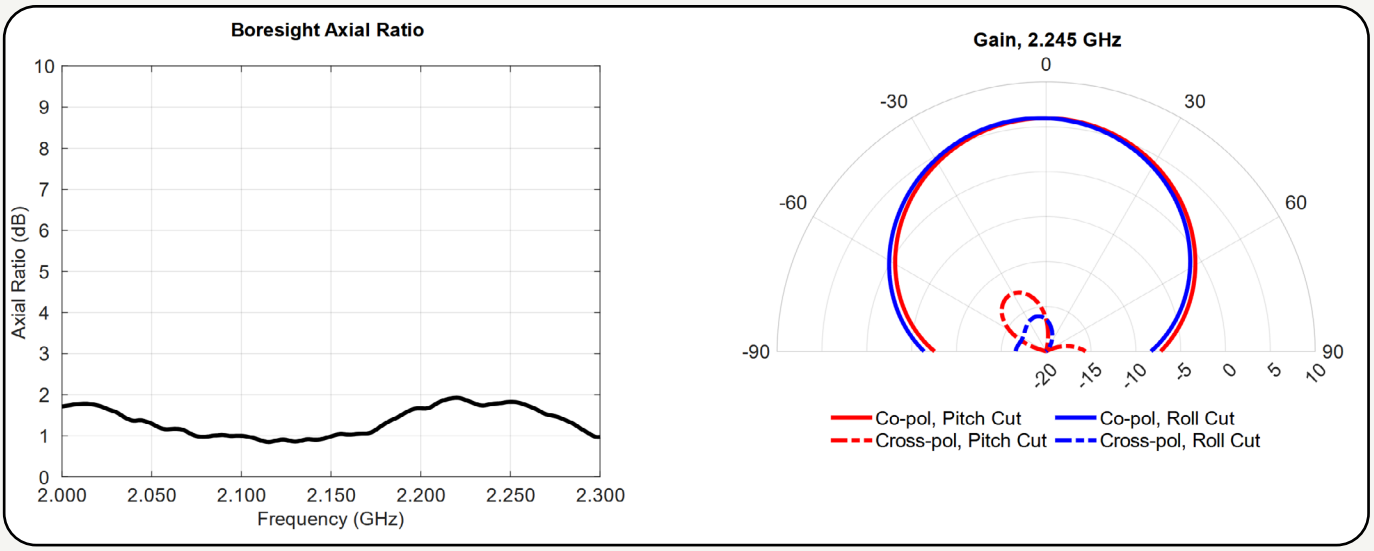
Boresight Axial Ratio
Axial Ratio (dB)
Frequency (GHz)
Gain, 2.245 GHz
Co-pol, Pitch Cut
Co-pol, Roll Cut
Cross-pol, Pitch Cut
Cross-pol, Roll Cut

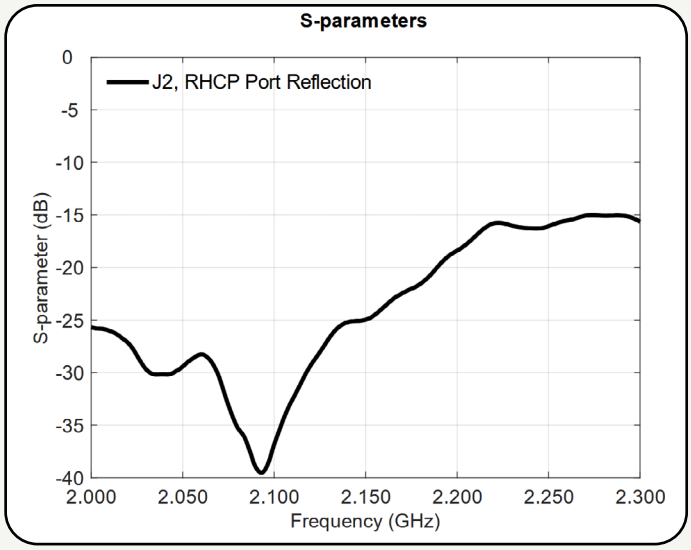
S-parameters
J2, RHCP Port Reflection
S-parameter (dB)
Frequency (GHz)

Typical Application Diagram

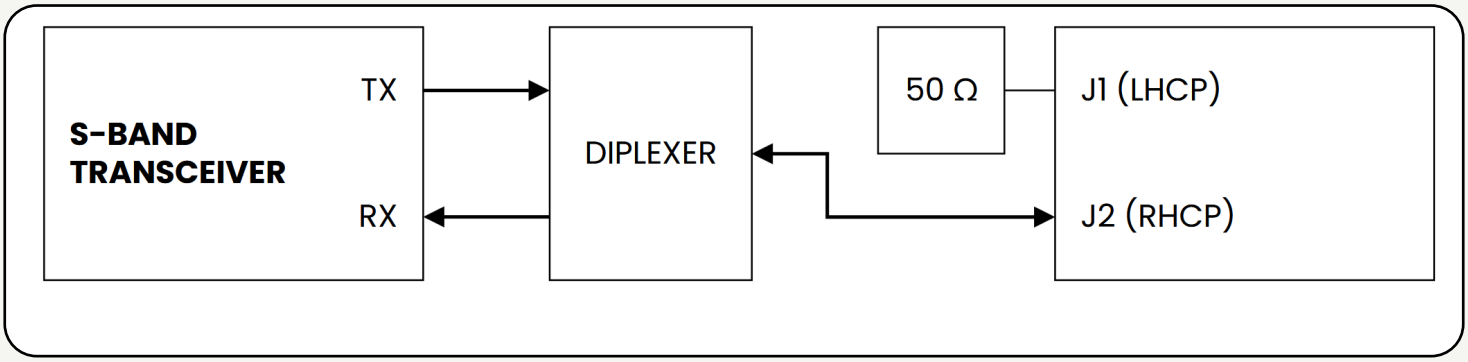

Mechanical Outline

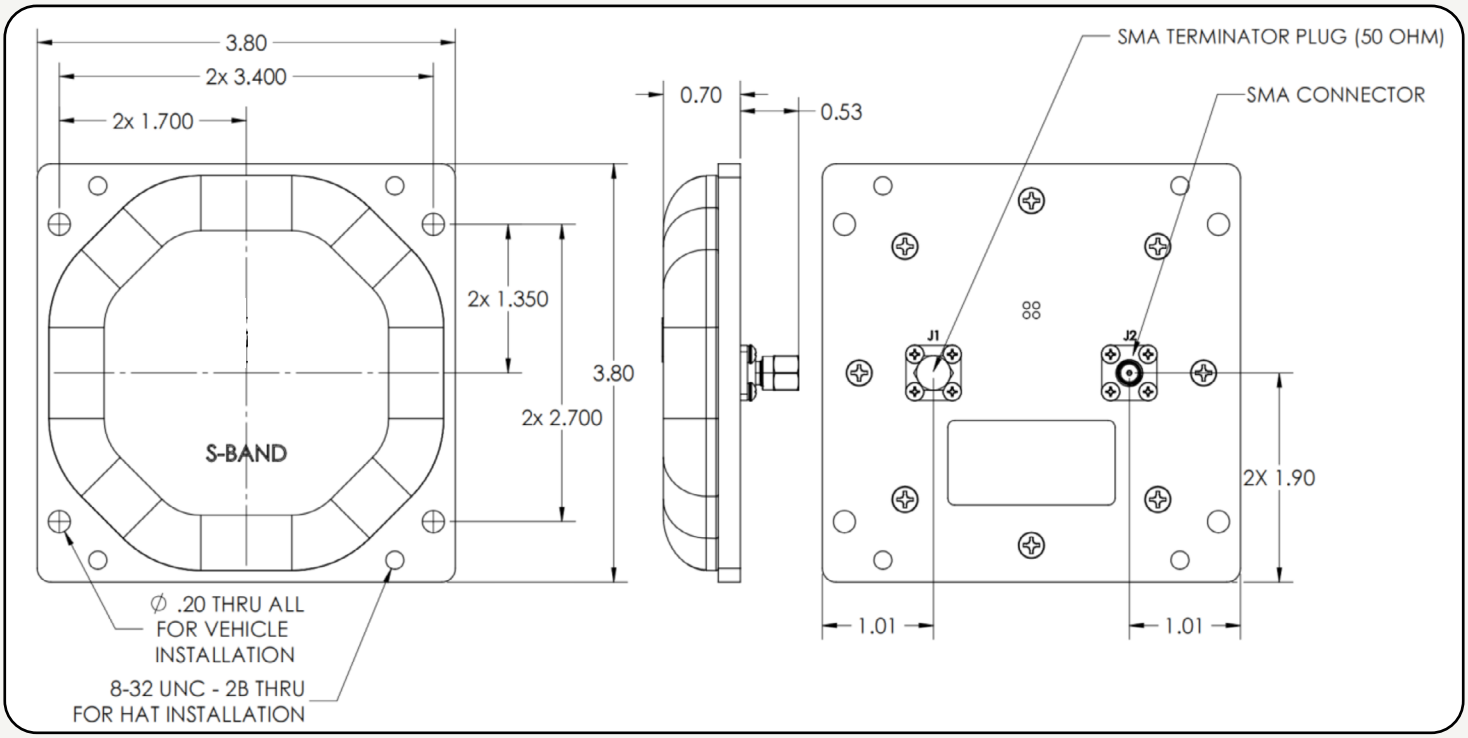

Dimensions shown in inches.
Tolerances - Two Place Decimal: ±0.010, Three Place Decimal: ±0.005