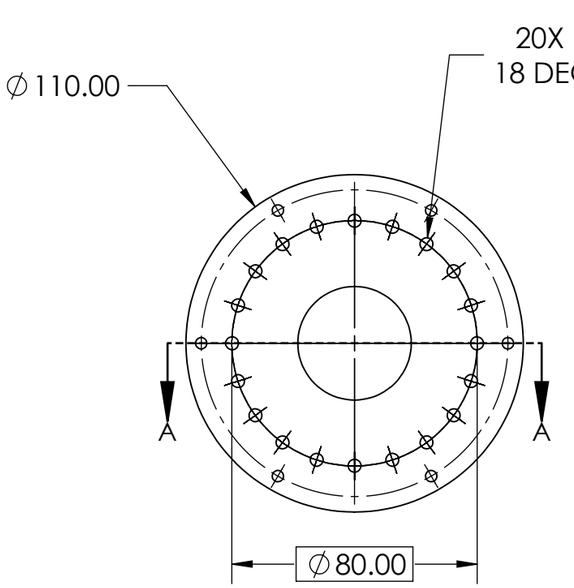

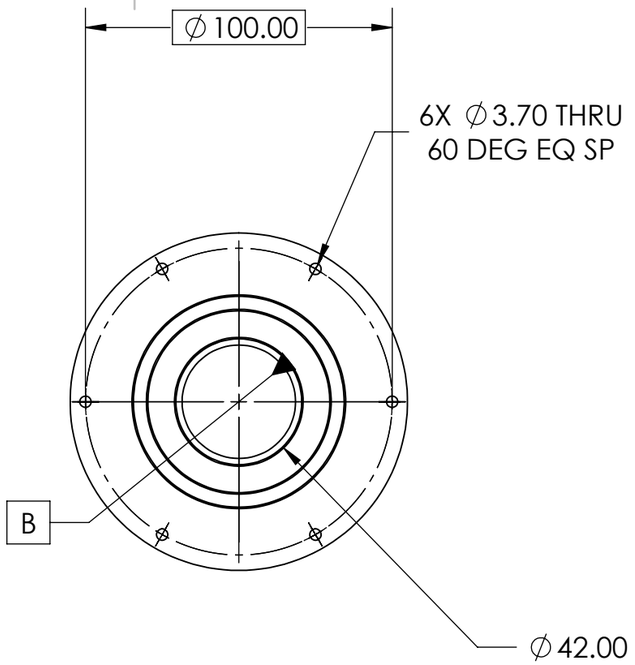

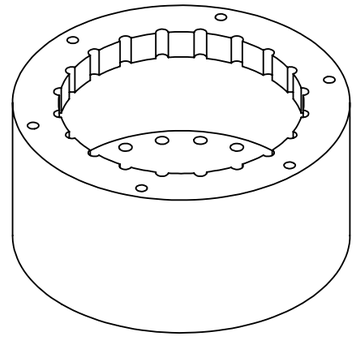

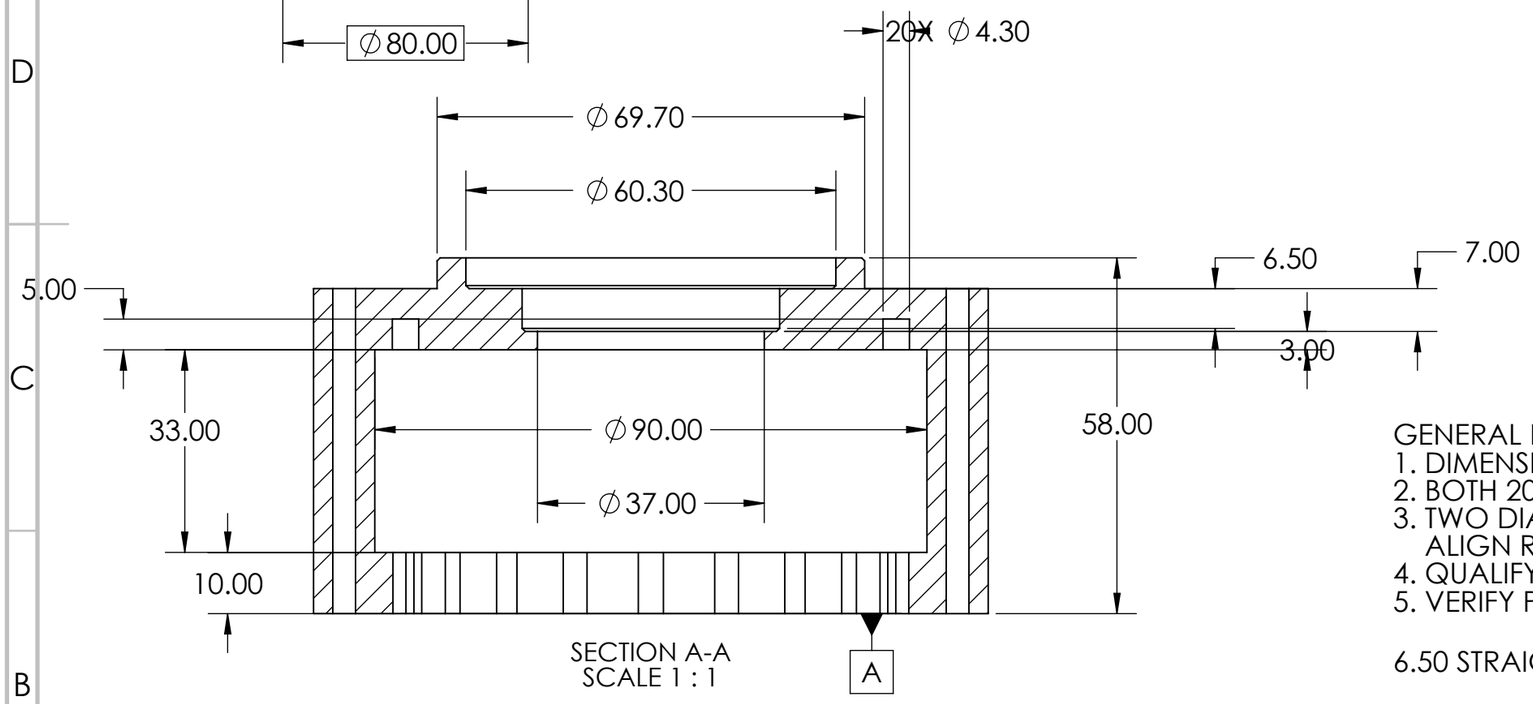

GENERAL NOTES
1. DIMENSIONS IN mm. ASME Y14.5-2018.
2. BOTH 20-HOLE PATTERNS SHARE ONE ANGULAR INDEX.
3. TWO DIAMETRICALLY OPPOSITE MOUNTING HOLES ALIGN RADIALLY WITH OPPOSITE ROLLER STATIONS.
4. QUALIFY BEARING SEAT ON A COUPON USING THE ACTUAL RING.
5. VERIFY POSITIVE RETENTION AND FREE INSTALLED ROTATION.

6.50 STRAIGHT BEARING LAND; 7.00 TO SHOULDER.

	NAME	SIGNATURE	DATE
DRAWN			
CHK'D			
APPV'D			
MFG			
Q.A			

DO NOT SCALE DRAWING | REVISION: E05-PLA

TITLE: ROLLER HOUSING

MATERIAL: PLA, FDM

DWG NO. CYC-HSG-001

A3

SCALE:0.5:1 | SHEET 1 OF 1

SOLIDWORKS Educational Product. For Instructional Use Only.