PRELIMINARY | REV E01 | ENGINEERING APPROVAL REQUIRED

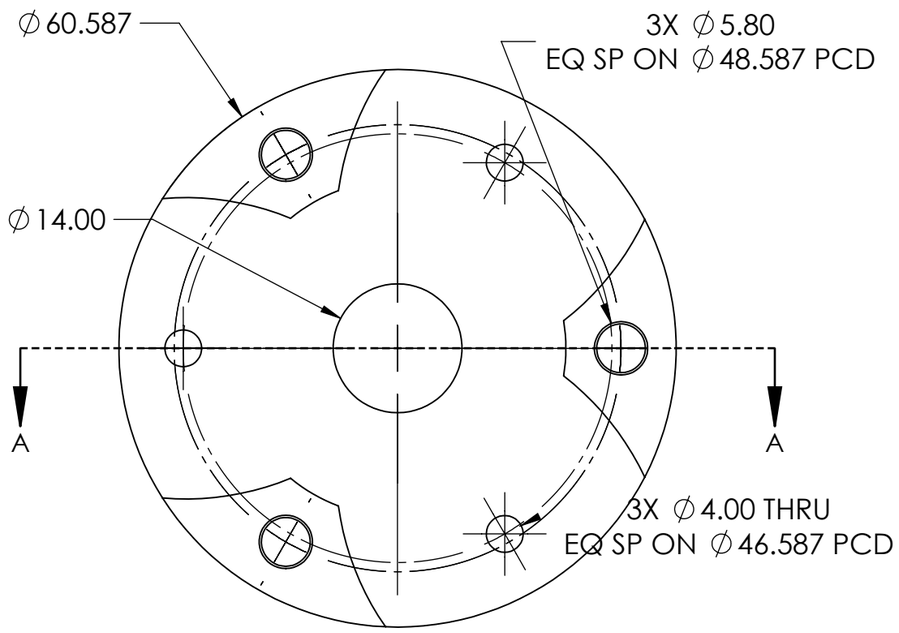

TOP | 1.5:1

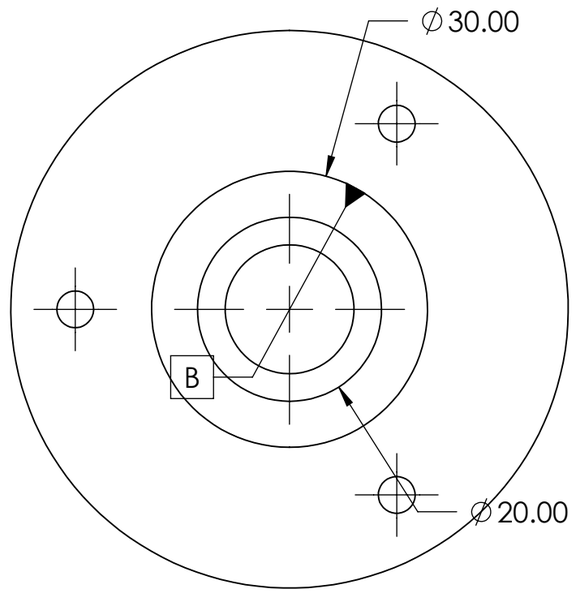

UNDERSIDE | 1.5:1

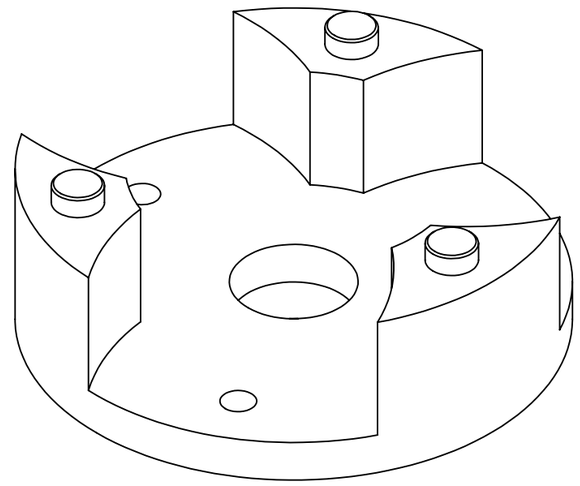

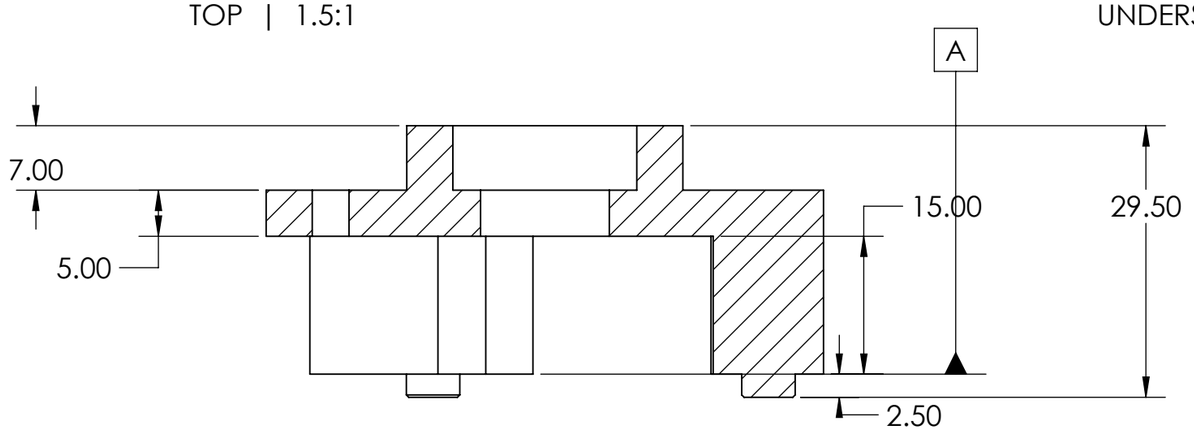

SECTION A-A
SCALE 1.5 : 1

PLA TRIAL. QUALIFY TOWER AND PIN LAYER ORIENTATION.
CHECK BEARING JOURNAL AND THREE PIN/POCKET ENGAGEMENT.
FITS, PATTERN POSITION AND SEAT FLATNESS REQUIRE APPROVAL.

3X PIN TIP CHAMFER 0.25 X 45 DEG. PATTERNS 60 DEG APART.
TOWER CONTOUR: LINKED DEFAULT MODEL; PROFILE LIMIT ON HOLD.

DIMENSIONS IN mm | ASME Y14.5-2018

THIRD ANGLE

DO NOT SCALE DRAWING | REVISION: E01

	NAME	SIGNATURE	DATE
DRAWN			
CHK'D			
APPV'D			
MFG			
Q.A			

MATERIAL: PLA - FDM

TITLE: STAGE 1 CARRIER

DWG NO. PD-S1C-PLA | A3

SCALE:1:1 | SHEET 1 OF 1

SOLIDWORKS Educational Product. For Instructional Use Only.