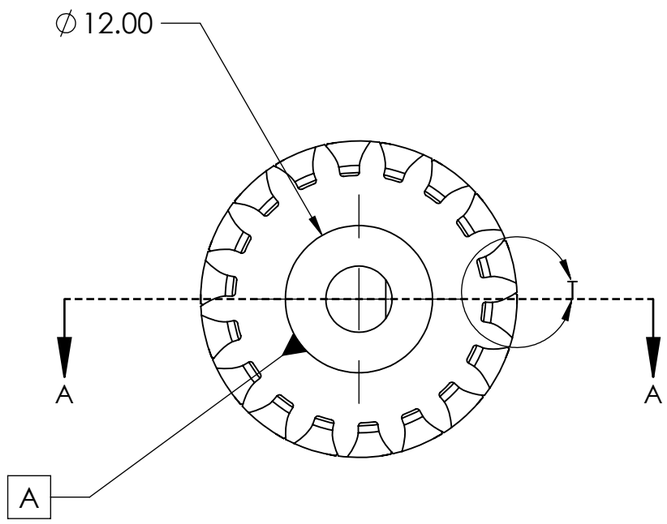

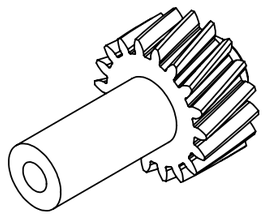

GEAR NOMINALS - HOLD	
PARAMETER	VALUE / BASIS
Tooth count / hand	18 / LH
Normal / transv. module	1.250 / 1.294095
Normal / transv. pressure	20.00 / 20.6469 deg
Reference helix	15.00 deg LH
Reference / base diameter	23.294 / 21.798
Tip / root diameter	25.794 / 20.169
Flank face width	12.00
Transv. reference thickness	1.88276 source
Radial tooth depth	2.812
Shift / root blend	0 source / R0.25 source
Accuracy / finish	HOLD - qualify process

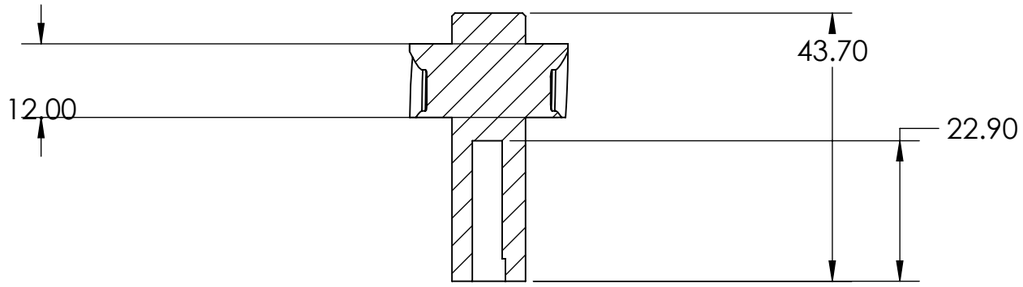

SECTION A-A
SCALE 1 : 1

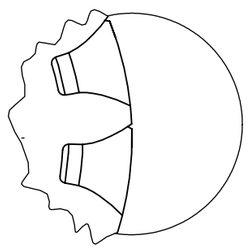

DETAIL T
SCALE 4 : 1

TOOTH INSPECTION	
CHECK	METHOD / STATUS
Profile / lead	Gear CMM; grade hold
Pitch / runout	Index / datum setup hold
Tooth thickness	Span or pins; limits hold
Mesh	Roll test and hot backlash

PLA TRIAL OR CNC ROUTE TBD.

DIMENSIONS IN mm | ASME Y14.5-2018

BORE ENTRY Ø5.40 X 3.65 DEEP FROM TRIMMED FACE.
FLAT AT 2.20 FROM AXIS. KEEP EXISTING SOCKET FLOOR STATION.

PRESS FIT IS NOT SPECIFIED. CHECK 17.90 NOMINAL FLAT ENGAGEMENT.
CHECK 0.30 NOMINAL NOSE CLEARANCE TO MOTOR BOSS.

CONTROLLED CAD: PD-G1S V2-B, DEFAULT.

	NAME	SIGNATURE	DATE
DRAWN			
CHK'D			
APPV'D			
MFG			
Q.A			

MATERIAL: PLA TRIAL

DO NOT SCALE DRAWING | REVISION: V2-B-D1

TITLE: STAGE 1 SUN GEAR

DWG NO. PD-G1S

A3

SCALE:1:1 | SHEET 1 OF 1

SOLIDWORKS Educational Product. For Instructional Use Only.