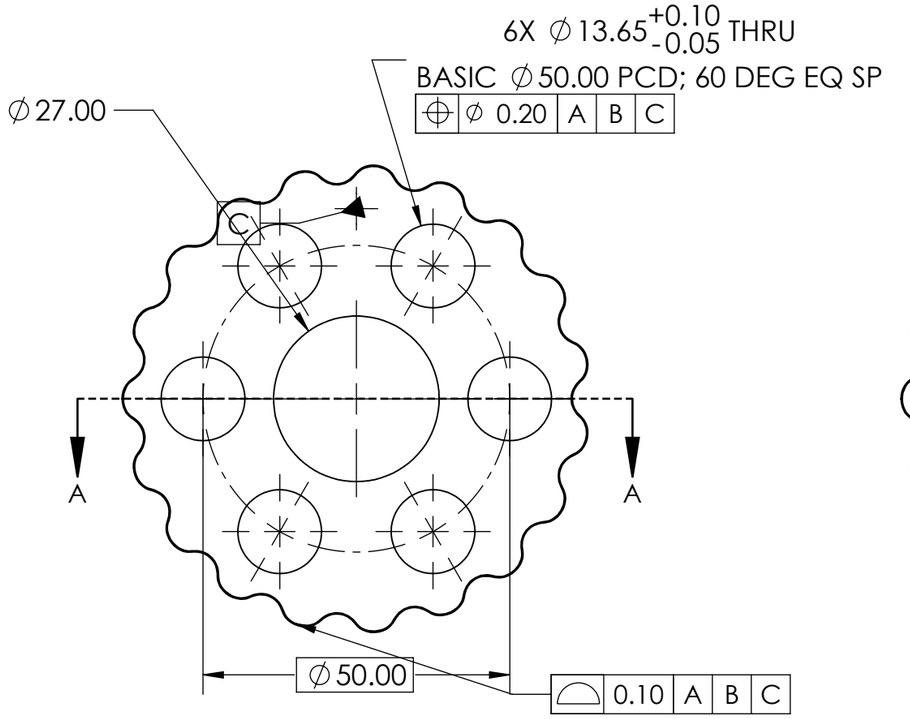

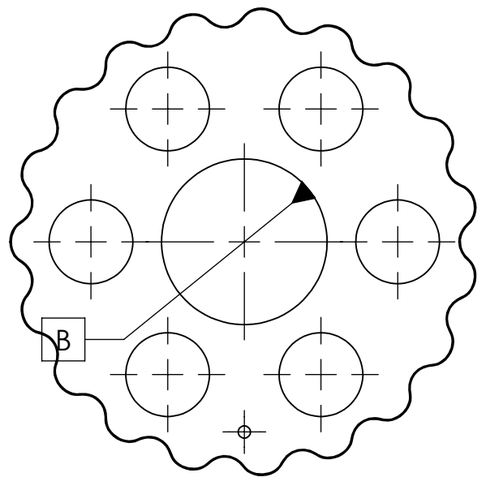

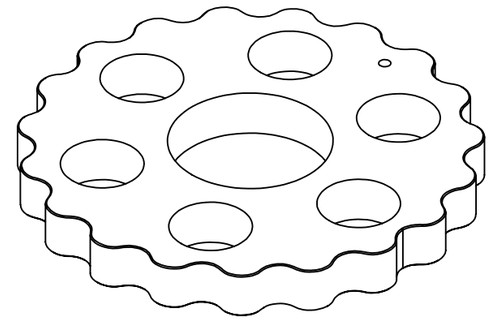

OPPOSITE END

CONTROLLED CAD: CYC-V2 ROTORV3, DEFAULT.

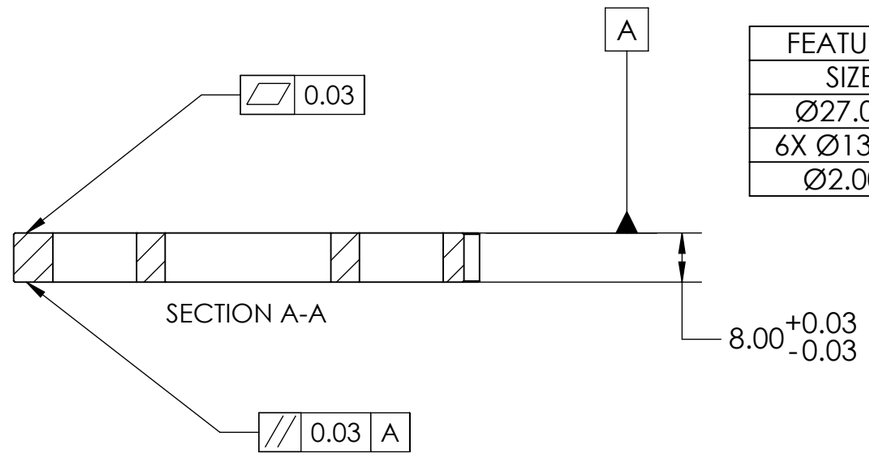

FEATURES		
SIZE	PATTERN PCD	STATIONS FROM S0
Ø27.000	AXIS	0.000 / 8.000
6X Ø13.650	Ø50.000 60.00 DEG EQ	0.000 / 8.000
Ø2.000	Ø62.000 MODEL	0.000 / 8.000

PROPOSED CNC TRIAL: 0.20 POSITION AND 0.10 PROFILE.
PROFILE APPLIES TO THE FULL WORKING FLANK; EXCLUDE CHAMFERS.
CLOCK BASIC HOLE CENTERS AND FLANK TO C PER CONTROLLED CAD.
C IS THE INDEX HOLE; B IS THE NOMINAL BEARING BORE. FIT OPEN.

CNC TRIAL ONLY: FACE CONTROLS AND THICKNESS ARE PROPOSED.
PLA: QUALIFY FACE FORM AND THICKNESS ON PRINTED TRIALS.

NOMINAL FLANK: CYC-V2 ROTORV3, DEFAULT.
PROFILE DEFINITION AND INSPECTION: SEE CYC-DIS-001 SUPPLEMENT.
BEARING FIT AND SURFACE FINISH LIMITS OPEN.
BEARING FIT AND SURFACE FINISH LIMITS OPEN.
Ø27.00 NOMINAL DEVELOPMENT SEAT. SELECT FIT TO INCOMING RACE.

	NAME	SIGNATURE	DATE
DRAWN			
CHK'D			
APPV'D			
MFG			
Q.A			

DO NOT SCALE DRAWING | REVISION: V2-D1

TITLE: CYCLOIDAL DISC

MATERIAL: PLA TRIAL; CNC TBD

DWG NO. CYC-DIS-001 | A3

SCALE:1:1 | SHEET 1 OF 1

SOLIDWORKS Educational Product. For Instructional Use Only.