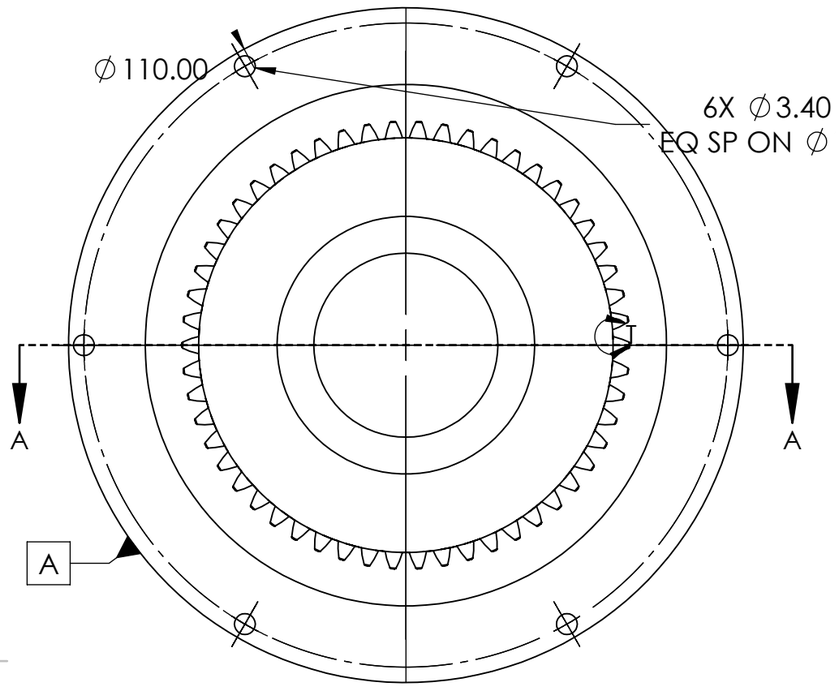

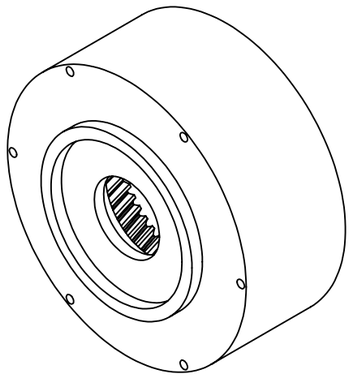

GEAR NOMINALS - HOLD	
PARAMETER	VALUE / BASIS
Tooth count / hand	54 / RH
Normal / transv. module	1.250 / 1.294095
Normal / transv. pressure	20.00 / 20.6469 deg
Reference helix	15.00 deg RH
Reference / base diameter	69.881 / 65.393
Tip / root diameter	67.581 / 73.006
Flank face width	12.00
Transv. reference thickness	1.88276 source
Radial tooth depth	2.712
Shift / root blend	Not unique / Hold / source fit
Accuracy / finish	HOLD - qualify process

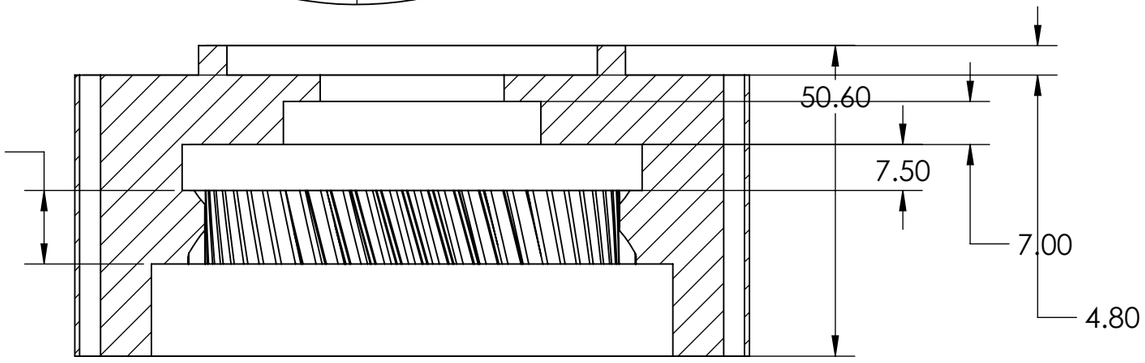

SECTION A-A

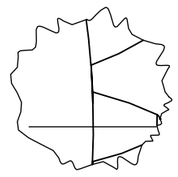

DETAIL T
SCALE 4 : 1

TOOTH INSPECTION	
CHECK	METHOD / STATUS
Profile / lead	Gear CMM; grade hold
Pitch / runout	Index / datum setup hold
Tooth thickness	Span or pins; limits hold
Mesh	Roll test and hot backlash

PLA TRIAL OR CNC ROUTE TBD.

DIMENSIONS IN mm | ASME Y14.5-2018

INSPECT FLANK PROFILE, HELIX AND PITCH TO CONTROLLED MODEL.
REPORT TOOTH THICKNESS AND INSTALLED MESH. GRADE UNASSIGNED.

6X Ø3.40 through on Ø105 PCD; fit/clocking on hold.
Stepped bores: Ø85 entry, Ø75 relief, Ø42 seat, Ø30 exit.
End lip: Ø69.60 / Ø60.40. Model controls stepped profile.

CONTROLLED P0 CAD: Stage1_Ring_Gear.SLDPRT / DEFAULT

	NAME	SIGNATURE	DATE
DRAWN			
CHK'D			
APPV'D			
MFG			
Q.A			

DO NOT SCALE DRAWING | REVISION: E03-D1

TITLE: STAGE 1 RING GEAR

MATERIAL: TBD

DWG NO. PD-G1R

A3

SCALE:1:1 | SHEET 1 OF 1

SOLIDWORKS Educational Product. For Instructional Use Only.