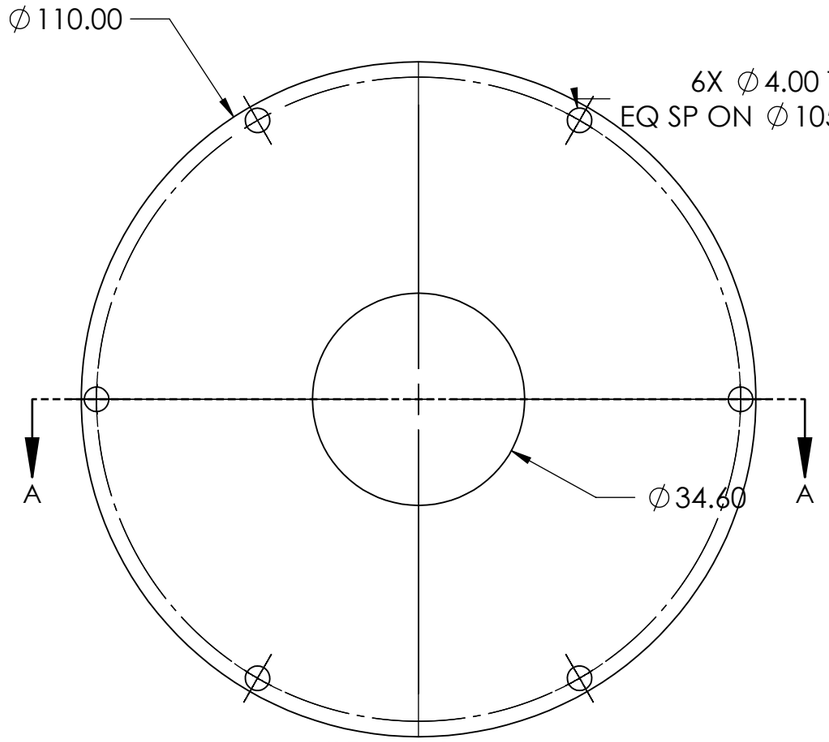

TOP | 1:1

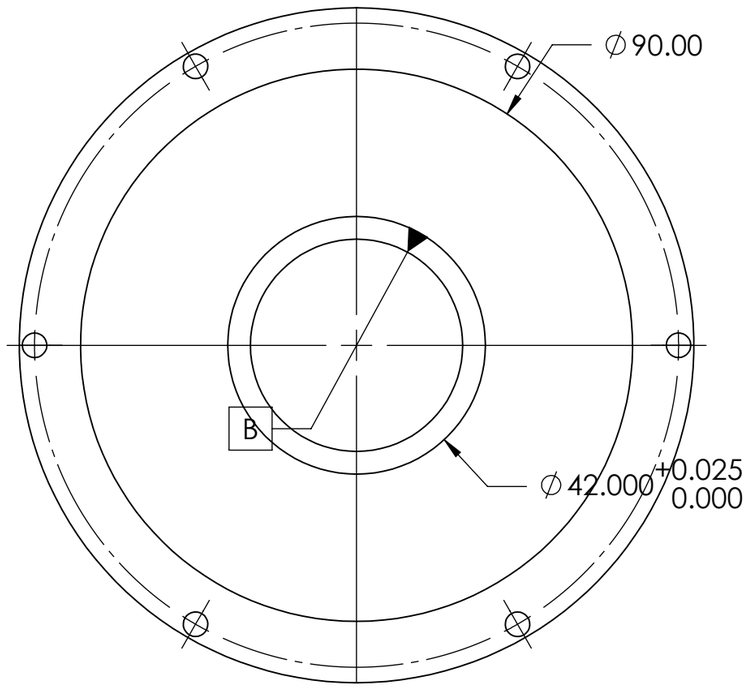

UNDERSIDE | 1:1

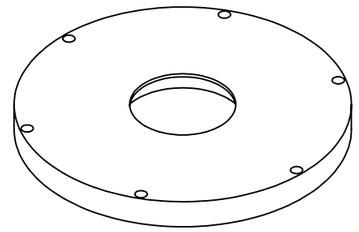

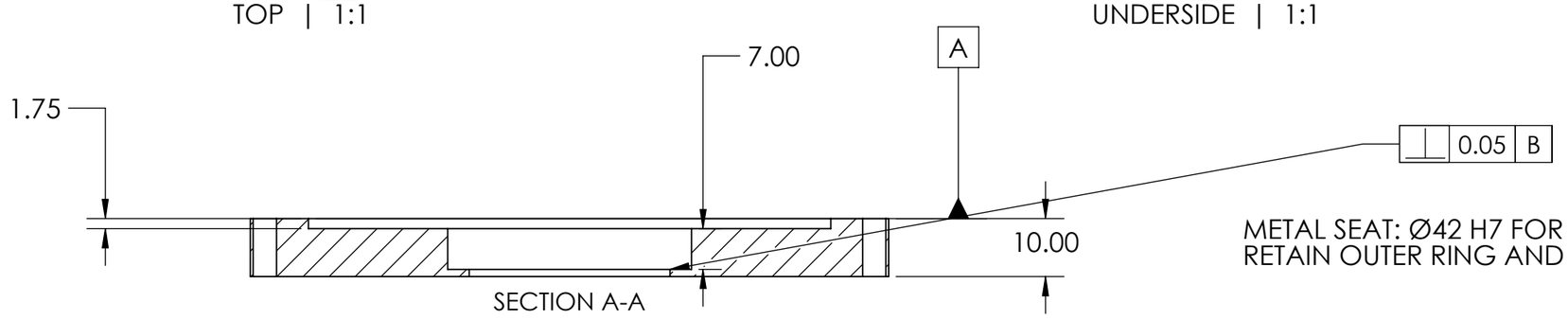

SECTION A-A

METAL SEAT: Ø42 H7 FOR STATIONARY OUTER-RING LOAD.
RETAIN OUTER RING AND CHECK INSTALLED RADIAL CLEARANCE.

CNC TRIAL: OUTER-RACE SHOULDER ORIENTATION TO SEAT AXIS.

6806-2RS SIZE CLASS: 30 X 42 X 7. SEAL TYPE AND FIT LIMITS OPEN.

NOMINAL SEAT CORRECTION FOR CAD REVIEW.
APPROVE SUPPLIER BEARING, RETENTION AND FITS BEFORE TRIAL.
QUALIFY FDM BORE FINISH AND FASTENER LIGAMENT.

DIMENSIONS IN mm | ASME Y14.5-2018

THIRD ANGLE

	NAME	SIGNATURE	DATE
DRAWN			
CHK'D			
APPV'D			
MFG			
Q.A			

DO NOT SCALE DRAWING | REVISION: E03-D1

TITLE: OUTPUT HOUSING

MATERIAL: PLA FDM TRIAL

DWG NO. PD-OH | A3

SCALE:1:1 | SHEET 1 OF 1

SOLIDWORKS Educational Product. For Instructional Use Only.