MAGIA Coffee

Undercounter pour-over coffee system with 4,3 inch Touch screen

BREW HEAD



BOILER

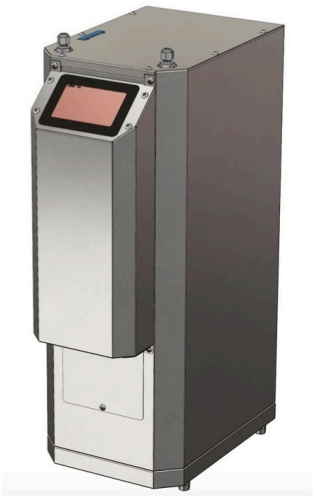

DIMENSIONS

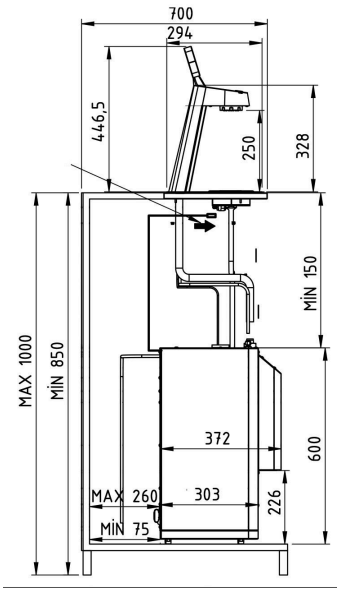

SPECS

NAME/CODE	POWER	VOLTAGE	TANK CAPACITY	PROGRAMS	BREW HEAD DIMENSIONS (D x W x H mm)	UNDERCOUNTER BOILER DIMENSIONS (D x W x H mm)	COUNTER HEIGHT (mm)	PLUMBING REQS
MAGIA COFFEE MC16	3 kW	230 V 1N	12 L	4	294x132x446,5	372x220x600	850–1000	3/4" BSP min. 1 bar

PACKAGING

NAME/CODE	NET WEIGHT (KG)	PACKAGING DIMENSIONS (D x W x H mm)	QTY/ PALLET
MAGIA COFFEE MC16	15	920x670x410	TBD