KIMAX

wws wasserkraft

WWS WASSERKRAFT

Small Hydropower Equipment & Systems

Austrian technology
Local partnership in Taiwan

KIMAX
WWS representative and partner in Taiwan

Equipment and applications October 2026



Austrian technology
Local partnership

KIMAX is WWS's representative and partner in Taiwan

Austrian equipment expertise with local engineering experience

Equipment selection and system integration

Project coordination and technical support in Taiwan



About WWS

Hydropower equipment from Austria

Turbine planning, design and manufacturing, with hydromechanical equipment and control systems.

50+
years of experience

350+
projects

300+
MW of project capacity

Experience and project figures are reported in the supplied WWS presentation, rather than live statistics.



Turbines and electromechanical equipment



Pelton turbines

< 15 MW



Francis turbines

< 15 MW



Kaplan turbines

< 5 MW



Permanent magnet generators

< 2 MW



Hydraulic power units

Ranges follow the supplied WWS presentation. Final specifications and performance depend on site conditions and WWS confirmation.

Systems and hydromechanical equipment



Hydraulic steel structures

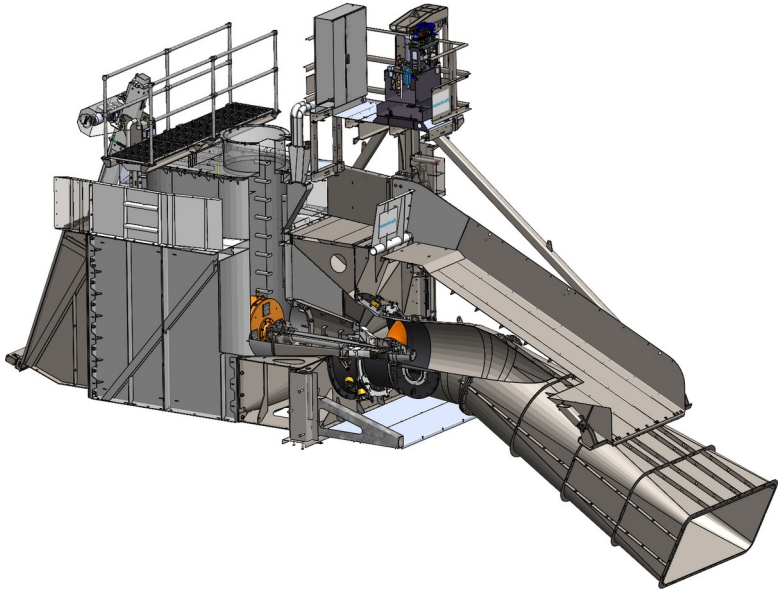

PowerGate



Turbine governors and controls



Pelton turbines



Power up to 15 MW

Net head up to 1,000 m

1–6 nozzles, selected for the flow





Ranges follow the supplied WWS presentation. Final specifications and performance depend on site conditions and WWS confirmation.



Francis turbines

Power up to 15 MW

Head up to 200 m

Horizontal or vertical arrangement





Ranges follow the supplied WWS presentation. Final specifications and performance depend on site conditions and WWS confirmation.



Kaplan turbines

Power up to 5 MW

Net head up to 30 m

3–6 runner blades, selected for the head

Semi-spiral, spiral, bulb and tubular types







Ranges follow the supplied WWS presentation. Final specifications and performance depend on site conditions and WWS confirmation.

KIMAX

wws wasserkraft

Permanent magnet generators

Product range below 2 MW

Example design data	Value
Rated speed	176.471 min^{-1}
Rated power	1,250,000 W
Maximum power	1,625,000 W
Rated voltage	230.94 V
Simulated generator power	−1,250,000 W
Simulated torque	−69,334.6 N·m
Rated current	1,921.51 A
Simulated efficiency	0.976191



A specific simulation example from the source. Signs follow its convention. Efficiency is not a guarantee for the range or a supplied unit.

Hydraulic power units

Hydraulic actuation for turbines and hydromechanical equipment

Hydraulic units configured for the equipment

Quality and operating reliability



Hydraulic steel structures

Hydromechanical equipment for hydropower plants

Design for the site and waterway

Integration with turbines and plant controls



KIMAX

wws wasserkraft

PowerGate
Integrated low-head unit

2–10 m
Net head

1–7 m³/s
Flow

30–300 kW
Output







Ranges follow the supplied deck. WWS's website lists a smaller range. WWS must confirm the applicable configuration for each project.

PowerGate Configuration and application

Integration into existing structures

Compact arrangement and simpler site interfaces

Access for cleaning, maintenance and flood operation

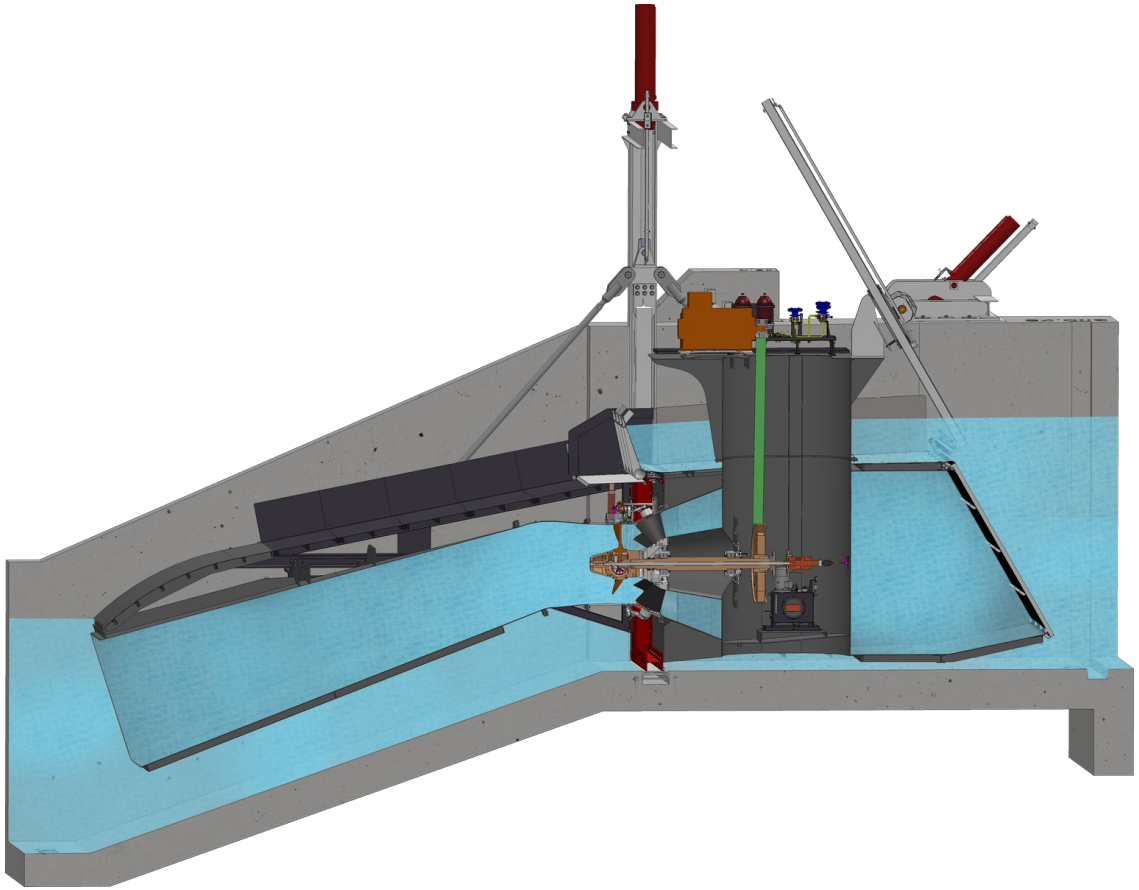

Illustrative configuration. Civil costs, efficiency and flood operation depend on the site and design.

PowerGate operation

Equipment configuration and operation

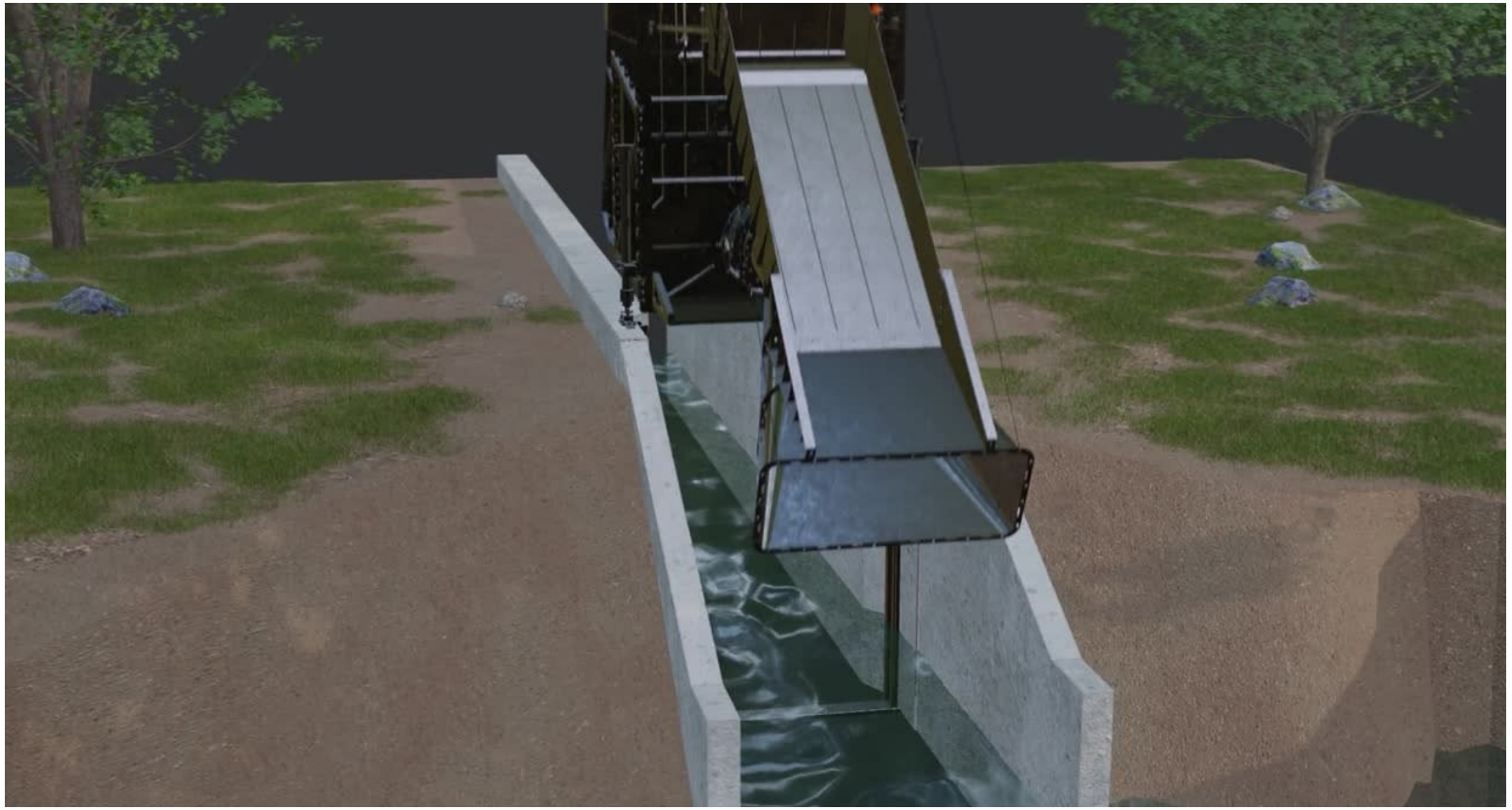

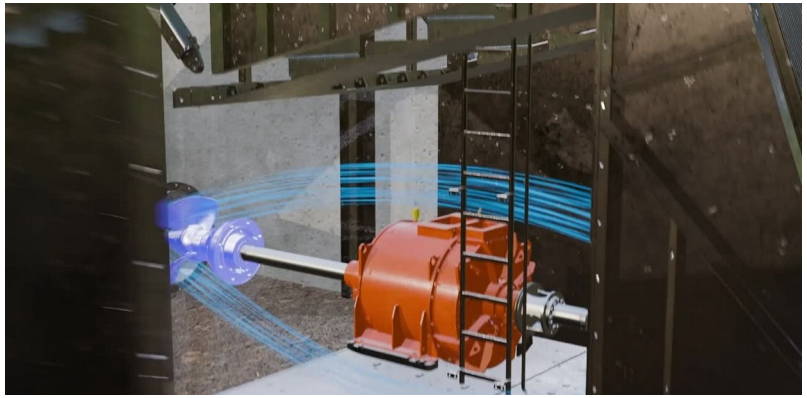

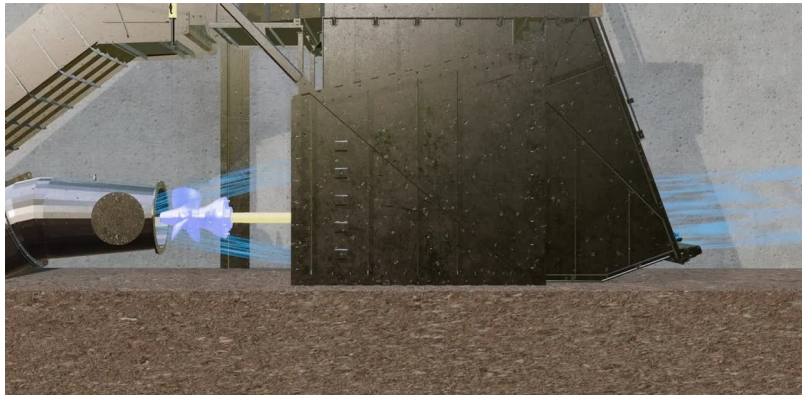

The turbine, water passage and gate arrangement require coordination with site water levels and existing structures.

PowerGate
Equipment integration

Turbine and generator

Gate and lifting mechanism

Trash rack and water passage components

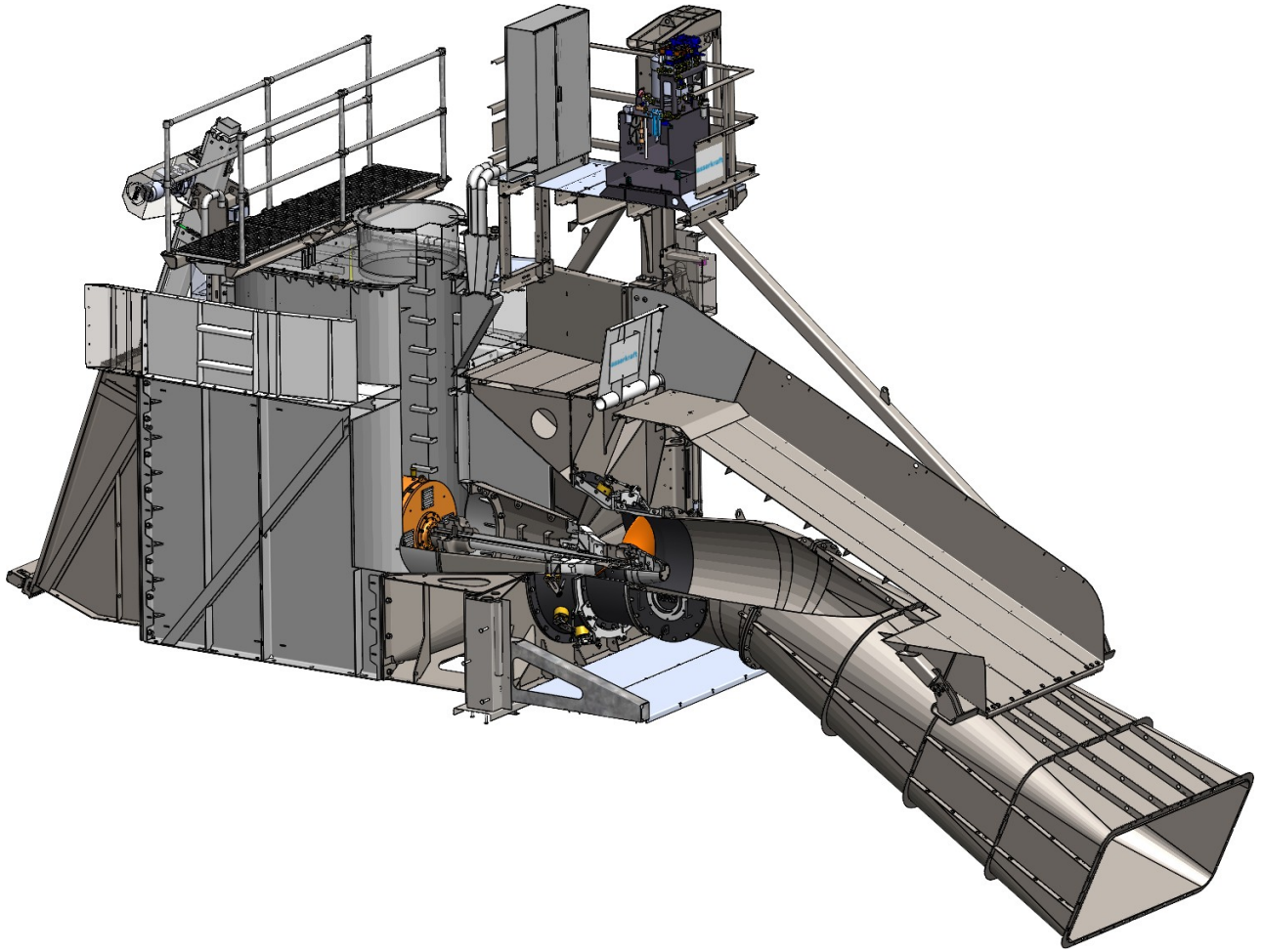

WWS equipment illustration. Actual components depend on the agreed scope.

KIMAX

wws wasserkraft

PowerGate gate lifting operation

Gate and hydraulic lifting mechanism in operation







The stills show different positions of the lifting mechanism. Operation depends on the WWS design and site conditions.

PowerGate fabrication and equipment at site

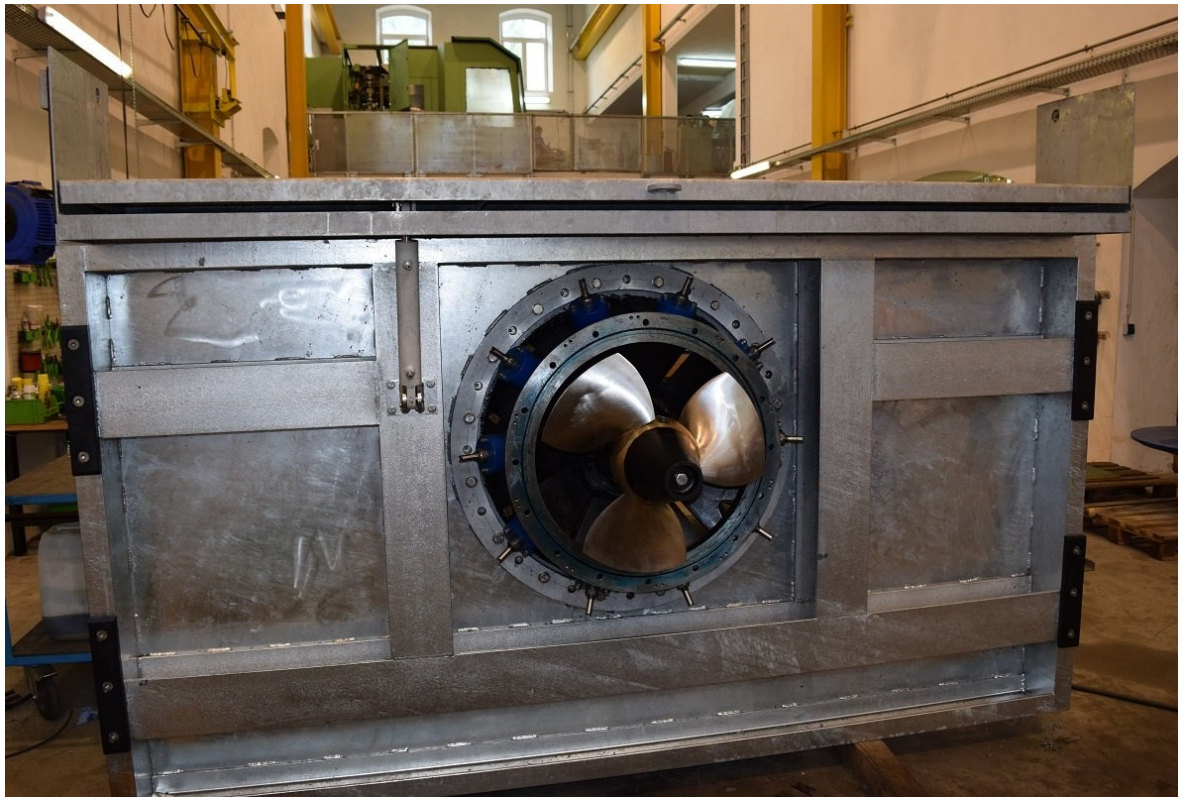

WWS fabrication



Equipment at site

Turbine governors and controls

Unit operation and status monitoring

Remote operating interface

Controls configured for the project



WWS quality and management systems

ISO 9001:2015	Quality management
ISO 14001:2015	Environmental management
ISO 45001:2018	Occupational health and safety
EN 1090-1	Structural component certification
ISO 3834-3	Welding quality requirements



WWS certifications listed in the supplied deck. Scope and validity follow current WWS certificates. They do not apply to KIMAX.

Small hydropower applications in Taiwan

Hydropower begins with site conditions

Existing waterways and irrigation systems

Pressure recovery in water supply networks

Selection based on head, flow and operating conditions



The source map is illustrative. It does not quantify development potential or establish site feasibility.

A shared vision

Clean local energy for Taiwan

WWS equipment expertise and KIMAX's local coordination support small hydropower applications suited to each site.



Projects in Taiwan

KIMAX TECHNOLOGY LTD.

WWS representative and partner in Taiwan

sales@kimaxenergy.com
+886 4 2350 7535
www.kimaxenergy.com

9F-2, No. 3, Ln. 2, Industrial Park 1st Rd.,
Xitun Dist., Taichung City 407228, Taiwan



Austrian manufacturer WWS Wasserkraft GmbH

www.wws-wasserkraft.at